PB82128026

BEHAVIOR OF UNTENSIONED-BONDED PRESTRESSING STRAND

STUDY NUMBER 77-1

Prepared for

MISSOURI HIGHWAY AND TRANSPORTATION DEPARTMENT

by

John R. Salmons

DEPARTMENT OF CIVIL ENGINEERING

UNIVERSITY OF MISSOURI

COLUMBIA, MISSOURI

JUNE 1980

in cooperation with

U.S. DEPARTMENT OF TRANSPORTATION

FEDERAL HIGHWAY ADMINISTRATION

The opinions, findings, and conclusions
expressed in this publication are not necessarily
those of the Department of Transportation,
Federal Highway Administration, or
the Missouri Highway and Transportation Department.
This report does not constitute a standard, specification or regulation.

TECHNICAL REPORT STANDARD TITLE PAGE

1. Report No. FHWA-RD- 77-1	2. Government Accession No.	3. Recipient's Catalog No. PB82 128026
4. Title and Subtitle BEHAVIOR OF UNTENSIONED-BONDED PRESTRESSING STRAND		5. Report Date June, 1980
		6. Performing Organization Code 306031
7. Author(s) John R. Salmons		8. Performing Organization Report No.
9. Performing Organization Name and Address Department of Civil Engineering University of Missouri - Columbia Columbia, Missouri 65201		10. Work Unit No. FCP 45F3732
		11. Contract or Grant No. HPR
12. Sponsoring Agency Name and Address Missouri Highway & Transportation Department		13. Type of Report and Period Covered Final Report 1/28/77 9/30/80
		14. Sponsoring Agency Code S01157

15. Supplementary Notes

Prepared in cooperation with U.S. Department of Transportation Federal Highway Administration

16. Abstract

The fatigue resistance of the untensioned-bonded prestressing strand in a configuration consistent with the bent strand connection for a precast I-Beam bridges was examined.

Two specimen types were tested. The first specimen type (single specimen) had two overlapping strands bent at 90 degrees over a reinforcing bar and cast in a single block of concrete. The opposing strands were gripped and loaded in a near axial condition. The second specimen type (double specimen) consisted of a single strand bent into a U shape with opposing sections of the strand cast in two separate concrete blocks. The load was transferred to the strand through the concrete portion of the specimen.

The failure mode for all specimens was determined to be fracture of the strand, therefore test variables were limited to stress range in the strand. An S-N curve was developed for stress range variation from 68.8% to 12.5%.

Design recommendations were developed for the bent strand reinforcement in the end connection for resistance to volume change forces in I-Beam bridges.

17. Key Words Untensioned-Bonded Prestressing Strand; Bent Strand Reinforcement; Positive Moment Connection		18. Distribution Statement No restrictions. This document is available to the public through the National Technical Information Service, 5285 Port Royal Road, Springfield, Virginia 22161.	
19. Security Classif. (of this report)	20. Security Classif. (of this page)	21. No. of Pages 73	22. Price

Form DOT F 1700.7 (8-69)

ABSTRACT

The results of the research efforts on Missouri Cooperative Research Study No. 77-1, "Behavior of Untensioned-Bonded Prestressing Strand" are reported. The fatigue resistance of the untensioned-bonded prestressing strand in a configuration consistent with the bent strand connection for precast I-Beam bridges was examined.

Two specimen types were tested. The first specimen type (single specimen) had two overlapping strands bent at 90^{0} over a reinforcing bar and cast in a single block of concrete. The opposing strands were gripped and loaded in a near axial condition. Eighteen single specimens were tested. The second specimen type (double specimen) consisted of a single strand bent into a U shape with opposing sections of the strand cast in two separate concrete blocks. The load was transfered to the strand through the concrete portion of the specimen. Twenty seven tests were performed on 23 double specimens.

The failure mode for all specimens was determined to be fracture of the strand, therefore test variables were limited to stress range in the strand. An S-N curve was developed for stress range variation from 68.8% to 12.5%.

Design recommendations were developed for the bent strand reinforcement in the end connection for resistance to volume change forces in I-Beam bridges. The stress in the strand should not exceed 15% of the minimum specified ultimate strength of the strand based on a fatigue life of 2 million cycles of maximum loading. In addition, a recommendation is made for casting the end diaphragms with continuity reinforcement prior to casting of the slab.

ACKNOWLEDGEMENTS

The testing program reported herein was conducted in the Civil Engineering Laboratories of the University of Missouri-Columbia, Columbia, Missouri. This work represents a report on the study of fatigue consideration of end connections for continuous pretensioned bridge beams undertaken by the Engineering Experiment Station and sponsored by the Missouri Highway and Transportation Department in cooperation with the Federal Highway Administration of the U.S. Department of Transportation.

Sincere appreciation is expressed to these organizations for the financial support of this work and additionally to those individuals of the Bridge Division who contributed guidance and review throughout the study.

TABLE OF CONTENTS

page

ABSTRACT i

ACKNOWLEDGMENTS ii

LIST OF FIGURES v

LIST OF TABLES vi

Chapter

I. SUMMARY, CONCLUSIONS AND RECOMMENDATIONS 1

1.1 Introduction 1

1.2 Test Program 1

1.3 General Conclusions 3

1.4 Design Recommendations 5

II. CONNECTION 11

2.1 Bent Strand Connection 11

2.2 Scope of Research 13

III. PREVIOUS RESEARCH 15

3.1 Fatigue of Concrete 15

3.2 Fatigue of Prestressing Strand in Air 16

3.3 Fatigue of Prestressing Strand in Flexural Members 19

IV. TEST PROGRAM 21

4.1 Specimen Geometry 21

4.2 Specimen Fabrication 24

4.3 Testing Methods and Apparatus 27

4.4 Test Parameters and Test Sequence 29

4.5 Instrumentation 31

V. TEST RESULTS 33

5.1 Displacement Relationships Double Specimen Series 33

5.1.1 Number of Cycles-Displacement Relationship 35

Chapter Page

5.1.2 Log-Number of Cycles - Displacement Relationship 37

5.2 General Mode of Failure 39

5.3 Failure Relationships 40

5.3.1 Double Specimen Series 40

5.3.2 Single Specimen Series 44

REFERENCES 47

APPENDIX A - DESIGN EXAMPLES 50

Case No. 1 50

Case No. 2 57

APPENDIX B - EFFECTS OF STRAND DIAMETER ON STATIC FREE END SLIP 63

B1 PROBLEM 63

B2 TEST PROGRAM 63

B3 TESTS RESULTS 67

B4 CONCLUSIONS 72

LIST OF FIGURES

Figure		Page
1.1	Typical Load Deflection for Static Connection Tests	6
1.2	Proposed Negative Moment Bent Strand Connection	8
2.1	Strand Configuration of the Proposed Connection	12
4.1	Single Specimen Configuration	21
4.2	Single Specimen Details	22
4.3	Double Specimen Configuration	23
4.4	Double Specimen Details	25
4.5	Fabrication of Double Specimen	26
4.6	Double Specimen Loading and Instrumentation Configuration	28
5.1	Typical Interface Displacement-Number of Cycles Relationship Specimen No. D31-11	34
5.2	Typical Interface Displacement-Number of Cycles Relationship Specimen No. D31-19	34
5.3	Average Interface Displacement vs. Number of Cycles for All Specimens at the Stress Range of 18%.	35
5.4	Average Interface Displacement vs. Number of Cycles for All Specimens at the Lower Stress Range	36
5.5	Typical Interface Displacement vs. Log Number of Cycles for All Specimens at the Stress Range of 20%.	37
5.6	Interface Displacement vs. Log Number of Cycles for All Specimens at the Stress Range of 18% & 12.5%	38
5.7	Stress Range vs. Log N for the Double Specimen Series	44
5.8	Stress Range vs. Log N for the Combined Double and Single Specimen Series	46

Figure Page

B1. Straight Specimen Details 64

B2. Straight Specimen Loading Arrangement 65

B3. Typical Steel Stress vs. Slip for Straight-Strand Specimens. Diameter- 7/16" 68

B4. Typical Steel Stress vs. Slip for Bent Strand Specimen Diameter - 7/16" 69

B5. Steel Stress vs. Slip for Straight Strand Specimens . . 70

B6. Steel Stress vs. Slip for Bent Strand Specimens 71

LIST OF TABLES

Table Page

4.1 Initial Single Specimen Series 30

4.2 Double Specimen Series 30

5.1 Double Specimen Series 41

5.2 Miner's Technique 43

5.3 Single Specimen Series 45

B1. Number of Specimens. 65

B2. Average General Slip Values 72

CHAPTER I

SUMMARY, CONCLUSIONS AND RECOMMENDATIONS

1.1 Introduction

When precast prestressed I-beams are used in bridge construction it is often desirable to make the superstructure continuous over interior supports. This condition is accomplished by placing steel reinforcement in the composite slab over the beam junctures. The continuity in turn restrains beam rotation due to volume changes in the prestressed members which produces a positive moment over the supports. A connection consisting of untensioned prestressing strands extending into the diaphragm and bent at 90° between the beam ends was developed to resist this moment. The static capacity of the bent strand connection was evaluated in previous research. The objective of the research reported here was to evaluate the capacity of the connection when subjected to fatigue loadings and to make recommendations for the connection design.

1.2 Test Program

An experimental investigation of the resistance to fatigue of the bent strand connection was conducted at the University of Missouri-Columbia Civil Engineering Laboratory. A single specimen configuration was designed to simulate the overlapping strand in the connection. The specimen consisted of two overlapping strands bent at 90° around a reinforcing bar and cast into a single concrete block 6" x 14" and varying in length from 40" to 43". This specimen configuration was satisfactory for static testing but was of only limited value in the fatigue tests since it required direct gripping of the strand (see Figure 4.1 and 4.2). The direct strand gripping

presented problems with premature failure of the strand in the grips. The prevention of this unacceptable failure resulted in the development of the double specimen configuration. The double specimen consisted of a single strand bent into a U shape with opposing sections of strand cast in two separate concrete blocks (see Figures 4.3 and 4.4). The precast concrete blocks were separated by a 7" space in which a 7" x 8" closure block was cast encasing the strand between the two portions of the specimen. The double specimen configuration allowed for loading through the concrete only eliminating the strand gripping problem.

The prestressing strand used in all specimens was uncoated 7-wire stress relieved strand conforming to ASTM A416 Grade 270k. The concrete mix was designed for a strength of 5000 psi; however, the actual cylinder strengths at the time of testing varied from 4403 psi to 9460 psi. Since the fatigue failures were limited to the prestressing strand the variation in concrete strength had no effect on the test results.

The test loads were such that a constant maximum and minimum stress in the strand was maintained during each test. The minimum stress for the single specimen configuration was 13.0 ksi. This minimum load was required in order to maintain stability of the specimen during testing. The minimum stress for the double specimen tests was zero. For each test sequence the maximum stress was varied, which produced a variation in stress range (percent of the specified ultimate stress) from 68.8% to 12.5%. Tests for stress ranges from 68.8% to 18.0% were conducted with the single specimen series. There were 18 satisfactory tests from the single specimen series; however, only the results from 12 tests were useable (see Table 5.3). On

the other hand, there were 27 tests with useable results generated from 23 double specimens. Stress ranges for this sequence ranged from 48.4% to 12.5% with tests at ±12.5% and ±24.4% (see Table 5.1).

The test program developed sufficient results to generate design recommendations for the positive moment reinforcement in the proposed connection. The number of tests was limited due to the rate of testing which dictated the time required to complete each individual test. The limited number of specimens did not allow a statistical approach to be used as the basis for conclusions and design recommendations. However, adequate information was available for some conclusions and meaningful design recommendations.

1.3 General Conclusions

Based on the interpretation of the test results and observations during testing the following conclusions can be drawn. These conclusions were considered to be the most important and pertinent to the behavior of the proposed connection.

1. The mode of failure of the test specimens and consequently the proposed bent strand connection when subjected to cyclic loading is brittle fracture of the embedded strand. On the other hand the failure was not sudden for the lower stress ranges (36.6% and below). This behavior resulted from fracture of individual wires with successive increases of deformation until the cross section was sufficiently reduced to precipitate a tension failure.

2. For embedment length of 30 in. total (both pre- and post-bend lengths) bond deterioration did not enter the failure mode. The condition of general slip did not occur in any of the specimens tested. In general when comparing the displacements measured at the interface of the closure block the bond was apparently lost between the bends of the strand based on a uniform strain through that region of the specimen.

3. The location of the strand fracture was dependent upon the first crack location and the associated stress concentration. All failures at any reasonable stress range (68.8% and below) occurred at the interface of the specimen and the closure block for the double specimen series or outside the specimen for the single specimen series. For the double specimen series the failure occurred at the interface which showed first cracking. No failures occurred at the bend of the strand even though severe yielding was induced by the bending process.

4. The fatigue strength of untensioned strand was higher when compared to tensioned strand based on equal stress ranges. These results are not only based on the comparison shown in Figure 5.7 but are also consistent with reported test results where both tensioned and untensioned strand were contained in beams subjected to cyclic loadings. In these tests all fatigue failures occurred in the tensioned strand.

5. The relationship between stress range (also maximum tension stress) and log N (N-number of cycles) is consistent and follows trends of previous research for strand tested in air. These results are illustrated in Figures 5.7 and 5.8.

6. No recognizable effects occurred as a result of cycling the specimen through both tension and compression. Some of the specimens were loaded such that equal tension and compression forces existed at the interface of the closure block and the specimen. The resistance to fatigue loadings was essentially unchanged for these cases.

1.4 Design Recommendations

It is evident from the test results that when the bent strand connection is subjected to a cyclic loading in a cracked condition similar to the test specimen that a much reduced design stress in the strand would be required. However, the conservative nature of the connection behavior as compared to the fatigue test specimens decreases the probability that fatigue stresses would be critical. Fatigue failure is dependent upon the stress concentration created at a crack transversing the strand. From previously reported research (2) it was evident that the cracking moment of the diaphragm was quite high and under most conditions the diaphragm would not crack due to the restraint of volume changes. A typical load deflection curve from a static test of a full scale diaphragm connection is shown in Figure 1.1 Initial observed cracking occurred at moment values which ranged from

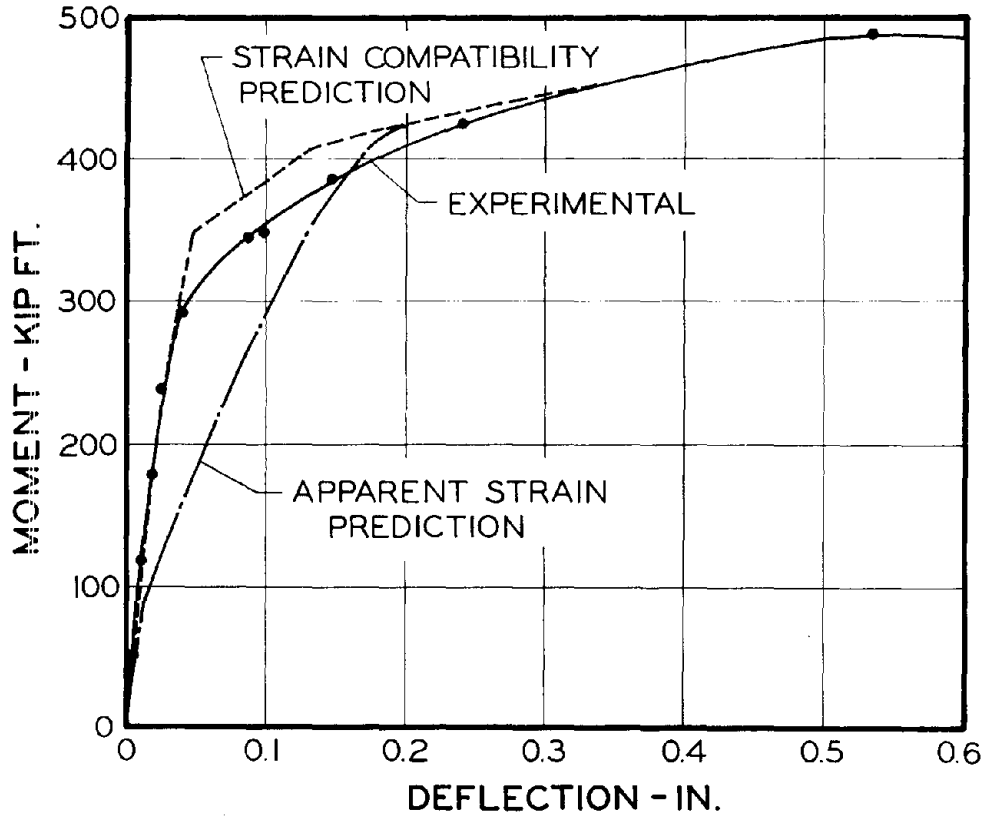

Figure 1.1 Typical Load Deflection for Static Connection Tests

0.41 to 0.68 for the ratio of M_{cr}/M_u for this test sequence.

In the event cracking occurs reinforcing must be provided to resist the positive moment resulting from restraining volume change in the precast/prestressed beams as well as those resulting from loaded distant spans. Methods of calculation of these moments have been well documented (17).

Based on the test results of this study the following design recommendations for the bent strand connection are made:

1. Due to the fatigue strength of the untensioned strand it is recommended that the stress level in the strand used for the connection to resist volume change forces should be limited to a maximum of 15% of the specified ultimate strength of the strand when

considering a service life with 2 million cycles of maximum loading. For roads where the design service life based on cycles of maximum loading is different a stress limit can be determined from Figure 5.8 or from the following equation.

$$\text{Log } N = 8.3779 - 9.151\ SR + 0.00129\ (SR)^2$$

where: N - number of cycles of design load

SR - % stress range.

For a zero lower limit SR represents the maximum design stress. The actual design stress (f_s) can be calculated from the following equation.

$$f_s = \frac{SR}{100}\ (270) = 2.7\ SR\ (\text{ksi})$$

2. Since the results of the fatigue tests were in general independent of the embedment length it is recommended that a fixed embedment length be established at approximately 30" for the lower strand in the connection (those resisting volume change moments). This will provide adequate anchorage for the strand in any stress range acceptable for design.

3. It is further recommended that the casting sequence be changed so that the end diaphragms are cast prior to the casting of the composite deck. In addition a connection using the top strand should be made which is capable of resisting the negative moment at the support due to the dead load of the deck. The general configuration of the negative moment connection is illustrated in Figure 1.2.

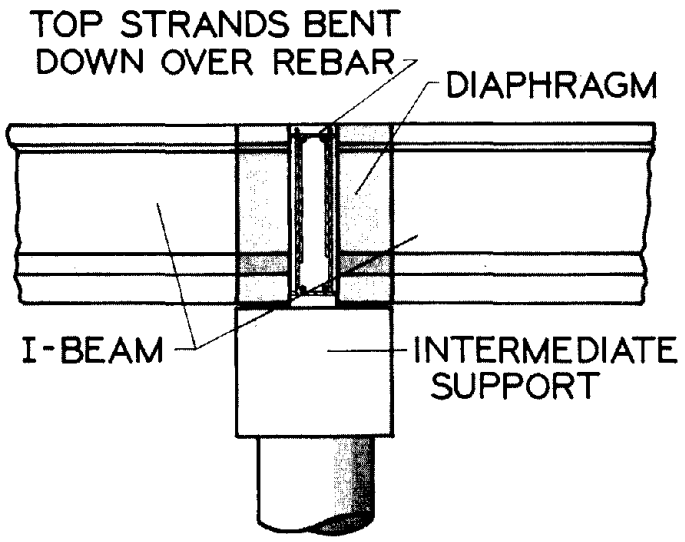

Figure 1.2 Proposed Negative Moment Bent Strand Connection

The design criteria for the strand in this connection can be based on the static criteria previously presented (1,3). However, it is recommended that the maximum strand stress be limited to value of 75% of the lower bound of the general slip value. This point approximately corresponds to the initial point of no linearity of the load displacement curves for the static tests of the full scale connection with diaphragm only (2). A revised expression for this design stress is given in the following equation.

$$f_s = 0.75\ [6.14\ L_e - 50.61]$$

where: f_s(ksi) - maximum allowable stress in the top strand in the bent strand connection for continuity under dead load of the slab.

L_e(in.) - total embedment length.

The results from which the above equation was derived were independent of the concrete strength of the test specimens. However, the concrete strengths ranged from 3750 psi to 6900 psi for the specimens tested. As a result, it is recommended that the diaphragm concrete attain a strength of at least 3750 psi prior to casting of the deck slab.

Care should be taken in fabrication of the bend of the prestressing strand in the connection. The development of the strength of the connection is dependent upon a 90 degree bend with an inside diameter of approximately 3/4 inches. A bend with a lesser degree of bend or on a larger diameter can reduce the capacity of the strand in the connection. Additional negative moment capacity through the connection is available by developing the diaphragm ties adjacent to the I-beam diaphragm interface. The procedure for using the ties and their effectiveness previously reported is applicable to this case provided those ties are closed in the diaphragm.

This latter recommendation is a method by which the joint can be preloaded in the tension area of the positive moment region resulting in an elimination or a reduction of the reinforcment requirements. Two examples of extreme cases (28'-40'-40'-28' spans, 4 at 130' spans) are presented in the appendix. The net design volume change moment (that remaining after the volume change moment is combined with the deck DL moment) was reduced to approximately 40% of the original value in the short span case. In the long span case the dead load moment actually exceeded the volume change moment. In both cases the number of top strands at the end generated by normal stress considerations combined with normal diaphragm ties were adequate for development of the connection.

It is recommended that the bent strand connection for negative moment be considered temporary and not subject to fatigue considerations. The conventional negative moment reinforcement placed in the slab over the supports should be designed to resist both live load plus impact and that portion of the negative moment due to slab dead load that exceeds the positive moment resulting from volume change in the beams. In those cases where the moments resulting from volume changes exceed that due to slab dead load the negative moment reinforcement in the deck slab should be for live load plus impact only.

With the development of continuity in the precast/prestressed I-beams prior to casting of the deck slab the stress state in the I-beams is altered. This change occurs along the entire length of the beam; however, the moment reversal at the ends of the beams produces a stress state that should be checked. On the other hand, at or near mid-span a reduction of positive moment due to slab dead load results from the development of continuity over the supports.

In general it appears that the development of continuity in the precast-prestressed I-beams over the supports by a bent strand connection in the diaphragm prior to casting of the deck slab offers many advantages when considering a structure made continuous for live load. The stress state of the combined structure over the service life should be improved. Even though there are construction detail changes associated with this proposed procedure change, the results should not only be structurally sound but contribute to cost reduction in this type structure.

CHAPTER II

CONNECTION

Bridge superstructures composed of precast prestressed I-beams with composite slabs are common methods of providing economical structures for intermediate span ranges. As these members are made continuous over supports, potential volume changes in the prestressed members that are restrained generate forces at the juncture of the I-beams. These forces are a direct result of the restraining movement from the volume changes. These forces generate positive moments at the support in the unloaded condition of the structure. Since there are no reinforcment requirements in this region of the bridge resulting from conventional load analysis, an evaluation of volume change forces and the corresponding reinforcement is necessary.

2.1 Bent Strand Connection

As reinforcement was designed for the volume change forces, the initial efforts used regular deformed reinforcing bars. The bars were embedded in the end of the I-beams and extended into the diaphragm forming a longitudinal connection between the I-beam ends. This method of making the connection presented some physical problems and introduced additional costs in the I-beam casting.

The use of bent strand reinforcement was developed to provide an economical connection to resist these volume change forces. The bent strand connection consists of extending the existing pretension strands into the diaphragm regions with bends to form a connection between the I-beam ends.

This connection is illustrated in Figure 2.1.

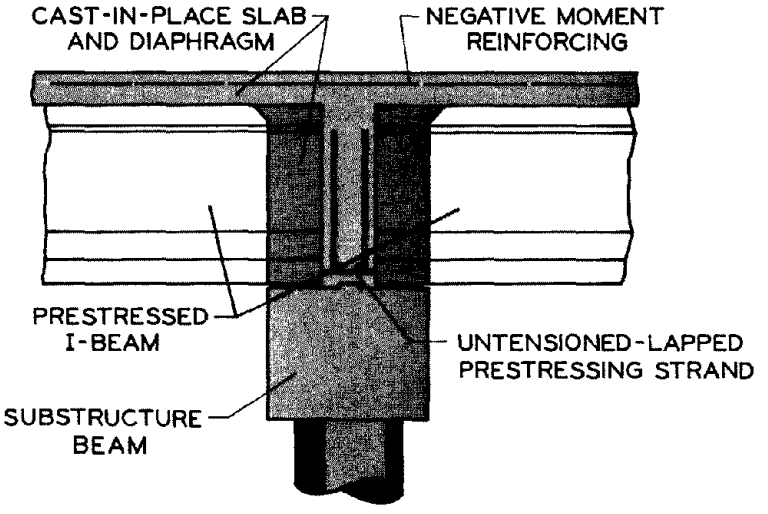

Figure 2.1 Strand Configuration of the Proposed Connection

Initial studies were conducted to evaluate the connection performance and develop design criteria (1,2,3). These studies encompassed both basic bond behavior and behavior of the actual connection. The tests conducted in these studies were entirely static and design recommendations were based on the static behavior. At the completion of the studies it was recognized that fatigue might present a problem. As a result, a reduced value of maximum stress was recommended. This recommendation was not based on fatigue tests but on a reduced static capacity. In turn, the static capacity of the connection was based upon the embedded length when general slip occurred. (General slip was defined as that condition where a measureable slip had occurred at the free end of the embedded strand.)

Throughout this study it was assumed that when failure of the connection was precipitated by fracture of the prestressing strand, it would be at the minimum specified ultimate stress of the strand. On the other hand, when failure of the connection occurred at a lesser load, it would be the result of deterioration of bond and anchorage between the strand and the surrounding concrete. This in fact was the mechanism of failure for all static tests in the initial studies. With this philosophy a reduced value of steel stress for design appeared to be rational. These failure mechanisms were not valid through the fatigue test.

2.2 Scope of Research

Since the question of fatigue remained unanswered, research was initiated to address that problem. The actual connection, for most practical purposes, is loaded such that tension in the embedded strand ranges from zero to that corresponding to a maximum positive moment condition. As a result, the research was limited to those cases where the stress was from a variable maximum value to a zero minimum value. This combination could be represented by a variation in stress range with a constant minimum value. After some initial tests, it was apparent that the mode of failure would be fracture of the steel strand for stress variations where any reasonable number of cycles (1000 or over) could be applied prior to failure. The failure mode eliminated the embedment length as a pertinent parameter for evaluation of connection behavior under fatigue loading.

The number of specimens was limited to a minimum necessary to evaluate the maximum stress which could sustain 2.0 million cycles of loading. This

was accomplished by varying only the maximum stress and all other parameters were maintained at a constant value. The constant parameters included the embedment length, strand diameter, concrete strength, rate of loading and mimimum stress which was maintained at zero. The time required for testing each specimen required the scope of the testing program be limited.

With the mode of failure limited to fracture of the embedded strand, the test results were independent of the concrete strength and the embedment length. The results were developed in the form of number of loaded cycles to fracture versus maximum steel stress (stress range). The loaded end slip versus load cycles were studied to evaluate the concrete bond deterioration. In addition, the strand size and ultimate strengths were constant at ½" diameter and 270 ksi, respectively, which is a commonly used strand in precast prestressed bridge beams.

From the evaluation of the test results as well as consideration of the physical loading condition, reduced design stresses for the strand in the connection are recommended. The recommendation includes a relationship for the numbers of load cycles at failure which can be used for bridges on lower volume secondary roads.

CHAPTER III

PREVIOUS RESEARCH

The concept of reduced design stress to account for fatigue is accepted for most high strength steels. Due to the normal range of loading of prestressed strand used in the conventional members special limitations are not required. However, the strand in the connection being studied was not loaded through this limited range and can be expected to have a reduced ultimate capacity. As the connection was loaded statically there was no indication of potential problems due to fatigue. A limited number of cycles of loading was included in part of the initial tests (1). In the static tests the failures were precipitated by deterioration of bond or by fracture of the strand with the latter at or near the rated ultimate capacity of the strand. From the static failure modes it was reasonable to expect the same modes of failure resulting from fatigue loadings.

Directly applicable research results in this are very limited and not adequate to provide meaningful guidance with respect to failure mode and type. In general the reported research deals with 1) fatigue of concrete in tension, compression and flexure; 2) fatigue of prestressing strand in air; 3) fatigue of prestressing strand in flexural members. In the latter two cases the fatigue failure deals with the strand and at stress ranges and minimum stress corresponding to that normally found in a prestressed beam.

3.1 Fatigue of Concrete

The reported research dealing with concrete is equally as limited as for prestressing strand. However, it is generally accepted

that the fatigue strength of concrete either in tension, compression or flexure is approximately 55% of the static ultimate strength for a life of 10 million cycles. Many of the variables such as water-cement ratio, cement content, curing conditions, age of loading, etc., which affect the static ultimate strength also influence fatigue strength in a similar proportionate manner (4).

Studies of the effect of fatigue loadings on shear in a beam with both prestressed and mild steel reinforcement as well as the effects on bond for regular deformed reinforcing bar have been reported (5,6). However, there were no attempts to evaluate or discuss the possible bond deterioration along prestressing strand. In the tests of prestressed I-beams strain measurements were made on the concrete surface which did not lend itself to the evaluation of bond deterioration.

3.2 Fatigue of Prestressing Strand in Air

The testing of prestressing tendons of the greatest consequence to this study are those for 1/2" diameter, uncoated seven-wire stress-relieved strand. In addition the strand must be anchored so that the strand fatigue was evaluated rather than fatigue at the anchor. Several series of tests have been conducted on seven-wire strand of different sizes and steel strengths. Some of the resulting equations and limitations of these tests are presented (7).

Fisher and Viest in 1961 tested 18 - 3/8 in. diameter seven-wire strand specimens. The mean ultimate strength of the strand was 270 ksi. The results were defined by the following equation (8):

$$\log N = 9.354 - 0.0423\ f_r - 0.0102\ f_{smin}$$

where: N = number of cycles to fatigue

f_{smax} = max strength in ksi during a constant loading cycle

f_{smin} = min stress in ksi during a constant loading cycle

$f_r = f_{smax} - f_{smin}$, stress range

Warner and Hulsbos conducted tests on 69 specimens at a constant load cycle as well as 51 specimens for cumulative damage fatigue tests. The specimens were 7/16" diameter seven-wire stress relieved prestressing strand. The following expression was developed for prediction of the mean fatigue life of the strand (9).

$$\log N = \frac{1.4332}{R} + 5.5212 - 0.0486R$$

where: N = number of cycles to fatigue

S_{max} = maximum stress in percent of static ultimate

S_{min} = minimum stress in percent of static ultimate

$R = S_{max} - (0.8\ S_{min} + 23)$

These expressions are limited by the following stress ranges as percent of static ultimate.

$$40\% < S_{min} < 60\%$$

$$0 < R < 15\%$$

Hilmes and Ekberg conducted additional tests on 7/16" diameter, 250 ksi seven-wire stress-relieved strand. Fifty-six specimens were tested with minimum stress at 50% and the maximum stress varying from 62.9% to 69% of the static ultimate. In general, the results of these tests, when combined with those of the two previous test sequences cited, produced equations for two ranges of fatigue life (10, 11).

1) For short life regions $40{,}000 < N < 400{,}000$

$$S_r = (1{,}640 - 11.5\ S_{min})\ N^{-0.320}$$

$$\text{or}\quad N = \left[\frac{1{,}643 - 11.5\ S_{min}}{S_r}\right]^{-3.125}$$

2) For long life regions $400{,}000 < N < 4{,}000{,}000$

$$S_r = (115.5 - 0.78\ S_{min})N^{-0.1154}$$

$$\text{or}\quad N = \left[\frac{115.5 - 0.78\ S_{min}}{S_r}\right]^{8.67}$$

where: $S_r = S_{max} - S_{min}$

with limitation: $40\% < S_{min} < 60\%$

Tide and Van Horn in 1966 conducted a series of tests to study the fatigue life of 1/2" diameter, 270 ksi, seven-wire stress relieved strand manufactured in the United States. A total of 178 specimens were tested, 140 at laboratory temperature (70°F) and 38 specimens at zero degrees F (0°F). The minimum stress was 40% or 60% of the static ultimate with a variation of the maximum stress. The following equations were generated from these tests (12).

$$\log N = 6.356 - 0.1373R_s + 0.00303\ R_s^2$$

where: $S_L = 1.05\ S_{min} + 8.0$

$R_s = S_{max} - S_L$

with limitations: $40\% < S_{min} < 60\%$

$0 < R_s < 20\%$

Even though the relationships presented in this section are not directly applicable to the fatigue life of the bent strand connection, the general form of expressions for strength of the strand in the connection should not be greatly changed from those for strand in air.

With the value of S_{min} at zero it would be anticipated that R_s and in turn the stress range would increase for any fixed fatigue life.

3.3 Fatigue of Prestressing Strand in Flexural Members

Prior to design criteria for prestressed concrete members which allowed a cracked condition under full service loads (partial prestressing) the concern for exceeding the fatigue life of prestressing strand in a flexural member was quite limited. For most structural applications a maximum stress range of 0.16 f_s' (f_s' is the static ultimate steel strength) should prevent fatigue life problems (13). There is a general feeling that the fatigue life of bonded prestressing strand in a flexural member is greater than the same strand subjected to similar stresses in air. However since the variables involved with the evaluation of the fatigue life of strand in a beam are much more extensive than for an isolated strand test results in this area are much more incomplete.

Abeles, Brown and Hu reported test results from the series of small size under-reinforced, partially prestressed beams (7). One series consisted of 40 beams including three different sizes (6" x 12", 6" x 10", 4" x 9") with six different strand arrangements. In addition, results from 12 tests of 4" x 9" beams previously conducted were incorporated with these results. All strands used in these specimens were 1/4" diameter seven-wire stress relieved strand. Included in some of the test sequences were beams which contained both tensioned and untensioned strand. No attempt was made to generate new prediction equations for fatigue life of strand, rather comparisons were made with those generated for strand in air.

The general conclusions from this study were that the results from the beam tests compared favorably with those for strand in air. As long as the bond between the concrete and the strand was excellent the fatigue resistance of the beam was better than the strand in air. On the other hand when the bond was poor the fatigue resistance of the beam was greatly reduced.

In one sequence of tests one half of the strands and in a second sequence one fourth of the strands were untensioned. In no case was there a failure of the untensioned strand. This is consistent with the concept that a zero minimum stress will result in an increase of stress range for a fixed fatigue life.

Additional beam tests which evaluate fatigue life of prestressing strand for various purposes such as accumulative damage (14), combined prestressed and non-prestressed reinforcing (15), and blanketing of strand ends (16) have been conducted. The results from these tests are not directly applicable to the bent strand connection but simply provide background for a better understanding of the fatigue life concept.

The general reinforcing arrangement and details of the single specimen are shown in Figure 4.2.

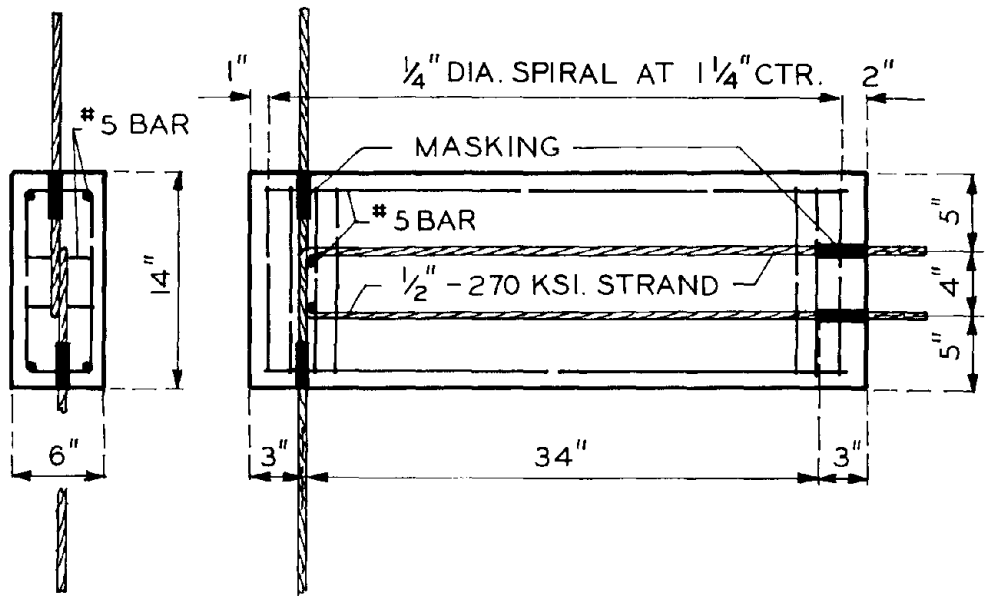

Figure 4.2 Single Specimen Details

Two major problems limited the use of the single specimen for fatigue testing: first, the development of a gripping device which eliminated premature failure of the strand at or in the grips; and second, the eccentricity of loading due to the overlapping of the two strands forming the connection. Since neither of the problems was successfully eliminated after several attempts, the specimen geometry was revised.

In order to obtain results for a large number of cycles the single specimen was abandoned. However, results with failure at low number of cycles were of limited value in the overall analysis. In addition, through these tests it was determined that the strand

fracture was the dominant mode of failure and for any practical embedment length the deterioration of bond would not be a reasonable failure mode. As a result, the revised specimen was designed to evaluate the strand fracture mode of failure only.

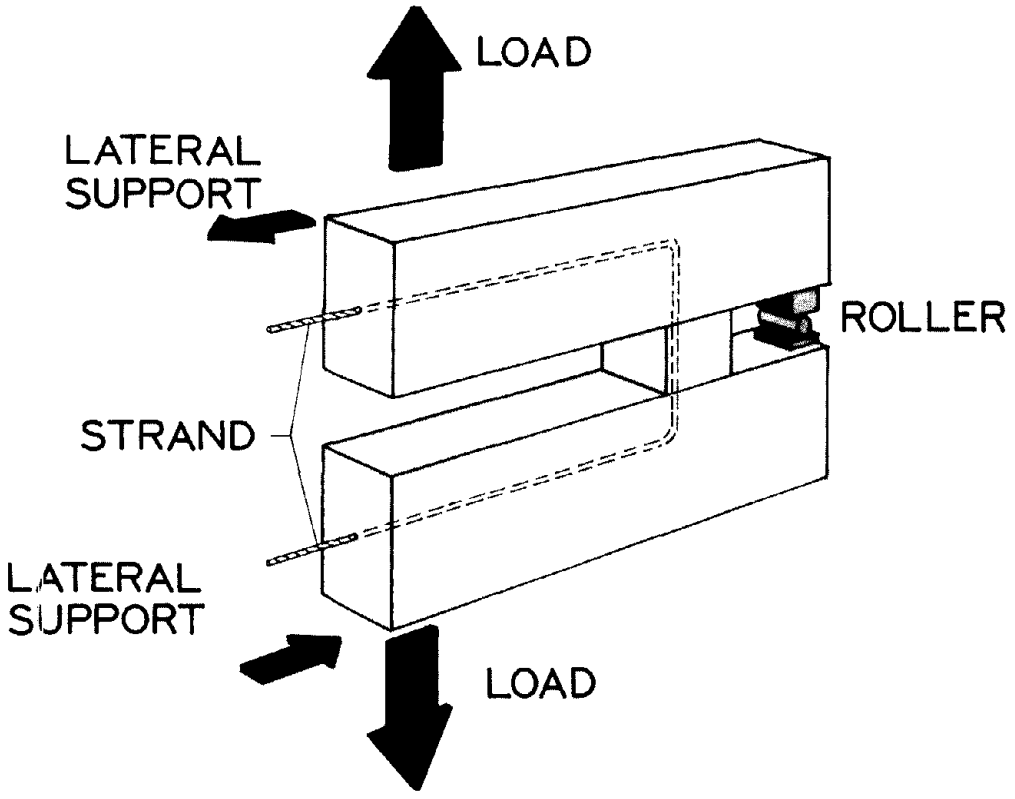

Figure 4.3 Double Specimen Configuration

The revised specimen configuration and loading arrangement is shown in Figure 4.3. Geometry was developed which eliminated direct gripping of the strand in order to apply the loads to the system. A single strand was used which eliminated eccentricity between load points. The revised specimen introduced the problem of inertia of the specimen since the lower section moves with each cycle of load. As a result, the rate of loading was limited to

2.5 hertz (cps) which could be maintained with movements at an acceptable level.

The revised specimen more closely simulated the actual connection. The strand was bonded through the entire loaded region and with a pre-bend length equal to that of the actual connections. Also, the strand passes through a construction joint similar to the conditions in an actual connection. The debonded region of the strand near the free end was sufficient to eliminate the clamping effect of the bolt plate clevis arrangement used to apply the load (Figure 4.6). The debonding was accomplished by enclosing the strand in a one-eighth inch layer of foam which proved to totally debond that region of the strand.

4.2 Specimen Fabrication

The actual details of the revised specimen are shown in Figure 4.4. The prestressing strand used in the specimen was uncoated 7-wire stress relieved strand conforming to ASTM A 416 Grade 270K. The No. 5 and No. 6 reinforcing bars were deformed rail steel conforming to ASTM A 616 while the ties were smooth hot-rolled 1/4" wire conforming to ASTM A36. The concrete used for the specimens had a 5000 psi mix design; however, the actual concrete strength varied from 4403 psi to 9460 psi. Since the failures were all fracture of the strand, the results were independent of the concrete strengths and this variation was not of consequence.

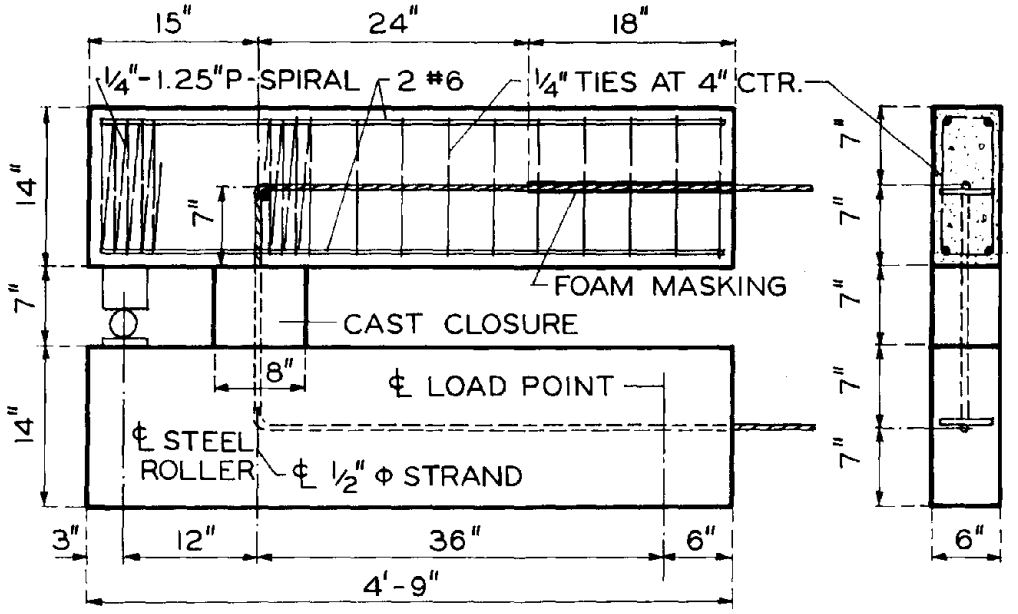

Figure 4.4 Double Specimen Details

The actual fabrication process was carried out in three steps. The two main reinforced concrete sections were formed and cast with only the untensioned bonded strand connection between the major elements (Figure 4.5a). After curing the bearing block-roller was placed, followed by forming and casting of the closure block. This basic process is illustrated in Figures 4.5b and 4.5c. The reaction in the specimen at the roller may be tension under certain conditions. As a result, a tension tie at the roller was provided.

Care was taken during handling to prevent premature cracking at the interface of the main specimen elements and the closure block. To prevent accidental loads, during handling and storage, wedges and a temporary clamp were placed on the specimen as illustrated in Figure 4.5d.

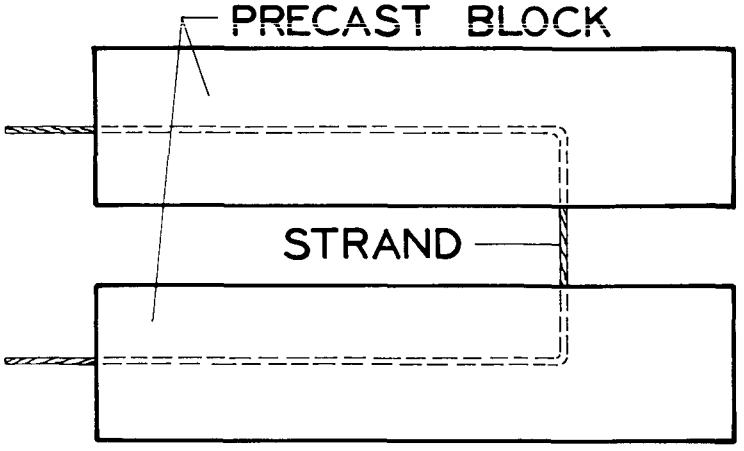

a) Initial Casting

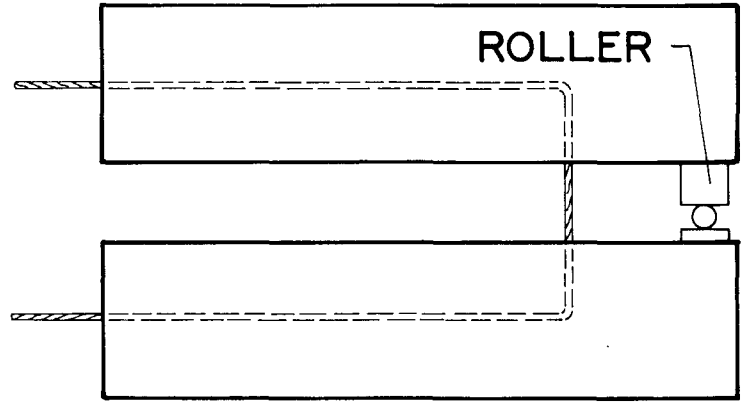

b) Placement of Roller

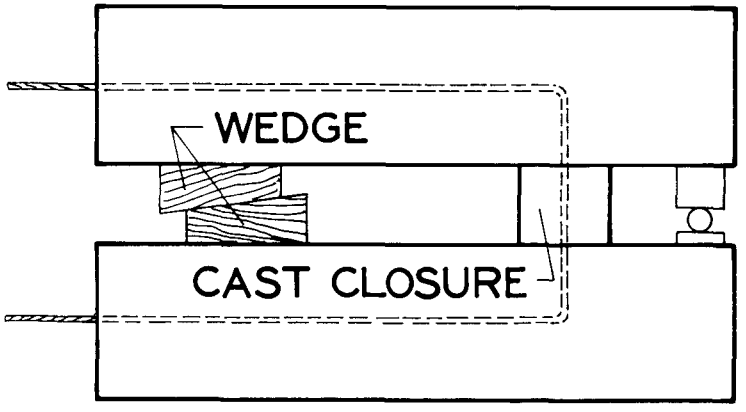

c) Casting of Closure

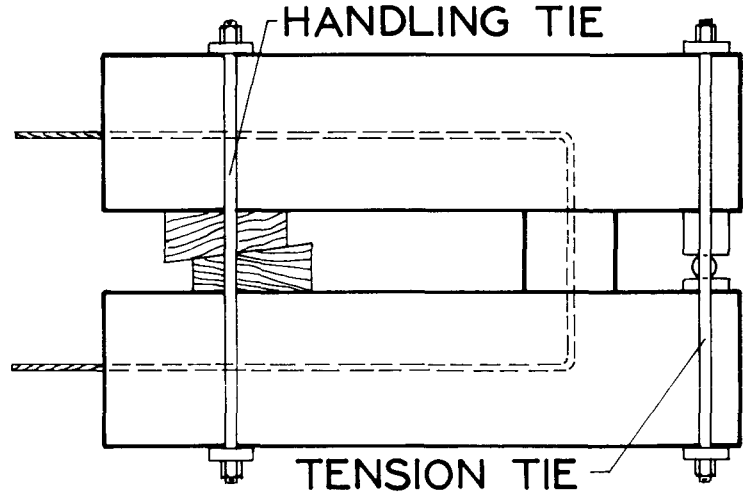

d) Placement of Tension Tie and Handling Clamp

Figure 4.5. Fabrication of Double Specimen

There were 12 usable tests performed on the original single specimens. After the specimen revision, 27 tests were performed on 23 specimens with the double specimen configuration.

4.3 Testing Methods and Apparatus

The specimens were tested in a specially constructed frame attached to a reinforced concrete test floor. The frame supported the specimen from a top load point with the load applied by hydraulic ram attached to the lower load point and to the test floor. For the single specimen the load could be applied directly to the strand which resulted in an axial loading condition with only lateral effects produced by the dead load of the specimen. The dead load of the specimen was supported independent of the load points.

Due to the nature and loading arrangement of the double specimen, a horizontal support was provided at a lower load point to maintain stability of the system. The general loading arrangement, support conditions and instrument location for the double specimen are shown in Figure 4.6.

The loading system was an electronically controlled servo hydraulic system (MTS). The system was equipped with a function generator with the capacity for cyclic loading in various forms. The loading used for these tests was a sine function oscillating about the median value with a minimum value at zero. The frequency of oscillation was limited to a maximum value of 2.5 hertz. These oscillations were monitored and controlled by an oscilloscope from a load cell. This allowed control

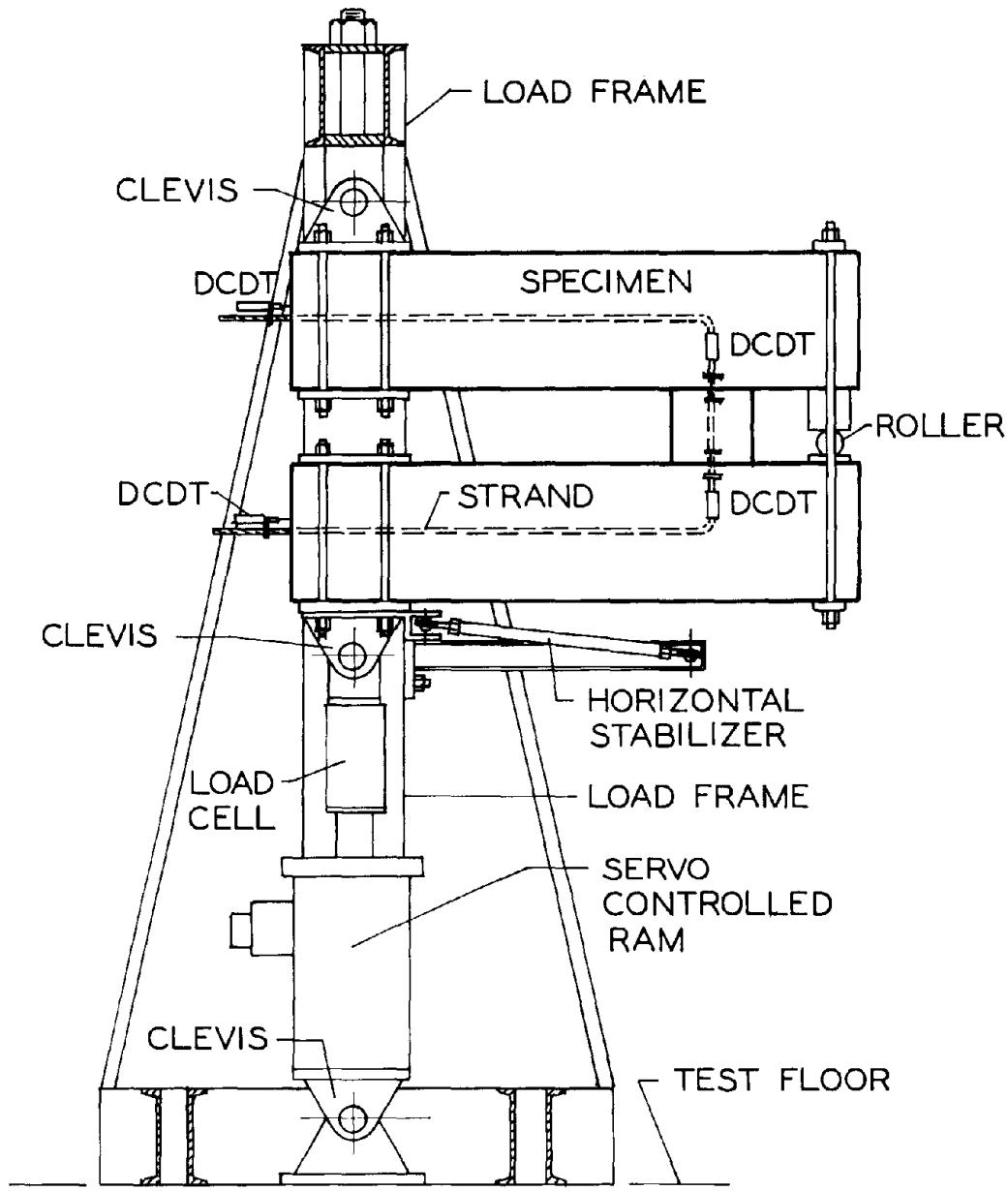

Figure 4.6 Double Specimen Loading and Instrumentation Configuration

based on the actual load at the ram. The oscilloscope values for maximum, minimum, and median were set with a direct static voltage from the load cell. The least reading from the voltmeter corresponds to the nearest 5 lbs. at the ram which in turn corresponds to 20 lb. at the strand in the double specimen.

4.4 Test Parameters and Test Sequence

The connection being tested presents a unique loading situation for prestressing strand. Since no prestressing force exists in the strand, the lower bound of the strand stress is at zero. It was anticipated that non-tension state would improve the ability of the strand to withstand cyclic loading. As a result, the initial test sequence included stress ranges that were very high. After the initial testing of the single specimen series, it was concluded that the very high stress ranges would not produce meaningful results. Consequently, the double specimen series was limited to lower stress ranges.

The stress level and number of specimens for the straight specimen sequence (the first test sequence) are given in Table 4.1. In general, the failure results were of limited value, due to the eccentricities of loading and premature fracture of the strand due to gripping. However, it was obvious from this test series that usable results would not be generated at the upper stress range levels. It was also clear from the measured deformations (number of cycles vs. slip) that bond deterioration for embedment lengths that would be reasonable in developing a connection would not need to be considered. Even though the single specimen proved to be unsatisfactory for the high cycle testing, the range of testing for the double specimen series was much more clearly defined through initial tests.

Table 4.1 INITIAL SINGLE SPECIMEN SERIES

NO. OF SPEC.	STRESS RANGE %	MAXIMUM STRESS KSI.	MINIMUM STRESS KSI.
3	72.9	210	13.0
6	68.8	177.1	13.0
3	36.6	111.8	13.0
6	24.4	79.1	13.0
2	18.0	61.7	13.0

Table 4.2 DOUBLE SPECIMEN SERIES

NO. OF SPEC.	STRESS RANGE %	MAXIMUM STRESS KSI	MINIMUM STRESS KSI
2	48.4	130.7	0
7	24.4	65.9	0
3	20.0	54.0	0
4	18.0	48.4	0
1	14.0	37.8	0
4	[1]12.5	33.8	0
3	24.4	65.9	0
2	[1]+12.5	33.8	-0.65
1	∓24.4	65.9	-1.27

[1]SR = 12.5 test was terminated prior to failure. Specimen was reloaded at SR = 24.4 to failure.

[2]Based on equal tension and compression loads.

The double specimen series was limited to a single embedment length with stress ranges and maximum and minimum stresses as given in Table 4.2. It should be noted that the minimum stress for those marked ± are based on an equal tension and compression force at the strand. The nature of the specimen and loading device precluded the loading such that equal tension and compression stress would exist in the strand. The listed values are based on strain compatability at the closure-specimen interface. From physical observations, these values represent a minimum since it was necessary to close the crack at the interface during each cycle.

4.5 Instrumentation

Meaningful measurements from a fatigue test of this nature are quite limited. However, at the initiation of testing, the mode of failure was not clear which resulted in the taking of some data which may be of limited value.

The slip at the interface of the specimen and closure block was measured. In addition, the free end slip was instrumented for measurement. All slip measurements were made with 24-volt direct current differential transformers (DCDT). The DCDT's at the specimen closure interface were ± 1/2 inch travel with the least reading of approximately ± 0.0004", while those at the free end were ± 0.1 inches travel, with a least reading of approximately ± 0.0001". The location of the gaging points are illustrated in Figure 4.6.

The data was sampled and recorded through a B & F multi-channel data acquisition system. The system contained a digital voltmeter (DVM) with a peak detector which allowed sampling of the maximum displacement

while the test was in progress. During a single scan, the number of cycles of loading as well as all peak displacements were recorded. The data was sampled at the prescribed rate, stored in a mini-computer and output to a teletype for direct transfer to the main computer or to be punched on paper tape. The sampling rate was fixed by the period of the oscillation without consideration of the rate at which the data transfer could take place. The rate was fixed such that one full cycle of loading would be included in each sample, which assured that there was at least one peak displacement in each period. For this test the data was punched on paper tape and transferred to magnetic tape in the main computer system.

Since each data scan was complete and was properly referenced to the preceding scan, the exact time between scanning was not of consequence. As a result, the timing of samples was somewhat arbitrary with more frequent readings during the earlier period of each test and longer periods between readings in the latter portion of the test.

CHAPTER V

TEST RESULTS

For the purposes of evaluating results, the tests are separated into two distinct parts, the single and double specimen phases. Data was acquired, processed, and evaluated from each; however, the results from the single specimen sequence were primarily used qualitatively while that from the double specimen series were used quantitatively as well. As a result, all displacement curves and most numerical data presented are for the double specimen series with only trends, general behavior and limited failure values from the initial single specimen series given consideration.

5.1 Displacement Relationships Double Specimen Series

For each double specimen the separation at the interface of the specimen and the closure was measured. Measurements were made directly in line with the strand, on each side of the specimen and at both upper and lower interfaces. At each interface, readings from both sides of the specimen were averaged, which compensated for rotation about the longitudinal axis. The rotations about the transverse axis were compensated for by using an average value for the two interface readings. Since the bond between the concrete and strand was not lost beyond the bend of the strand, the absolute value of the displacement was not of consequence. The displacement in most cases is slightly greater than that corresponding to the strain of a free loaded strand of a length equal to the distance between bends. The variation of the displacement is primarily due to the specimen construction.

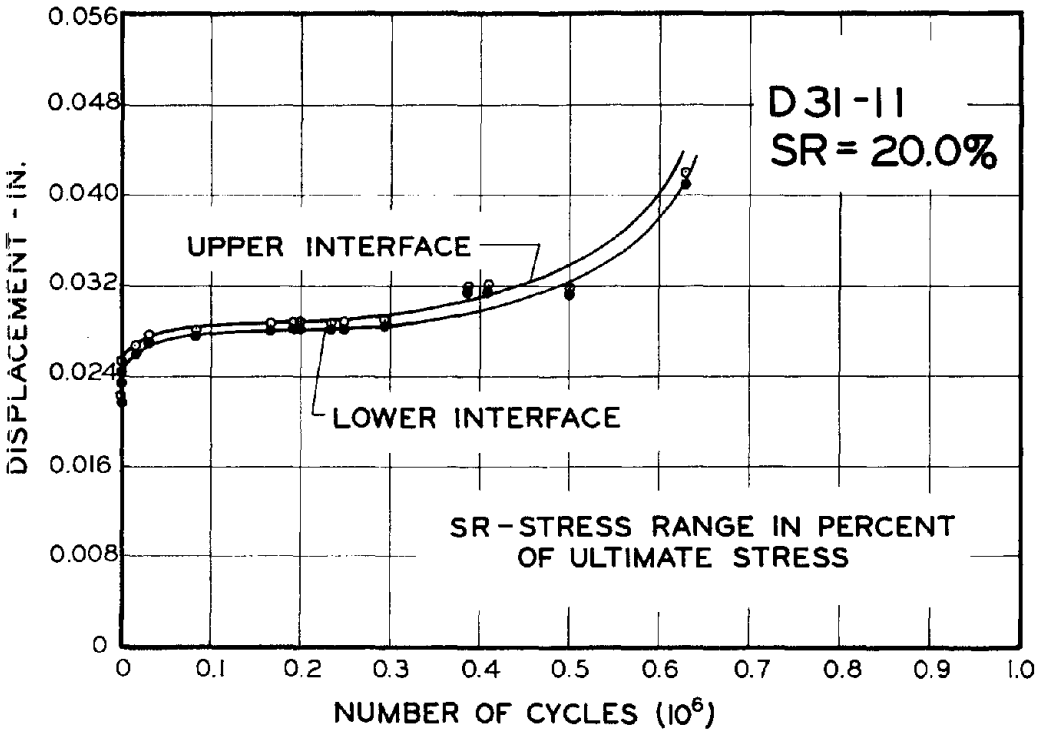

Figure 5.1. Typical Interface Displacement - Number of Cycles Relationship - Specimen No. D31-11

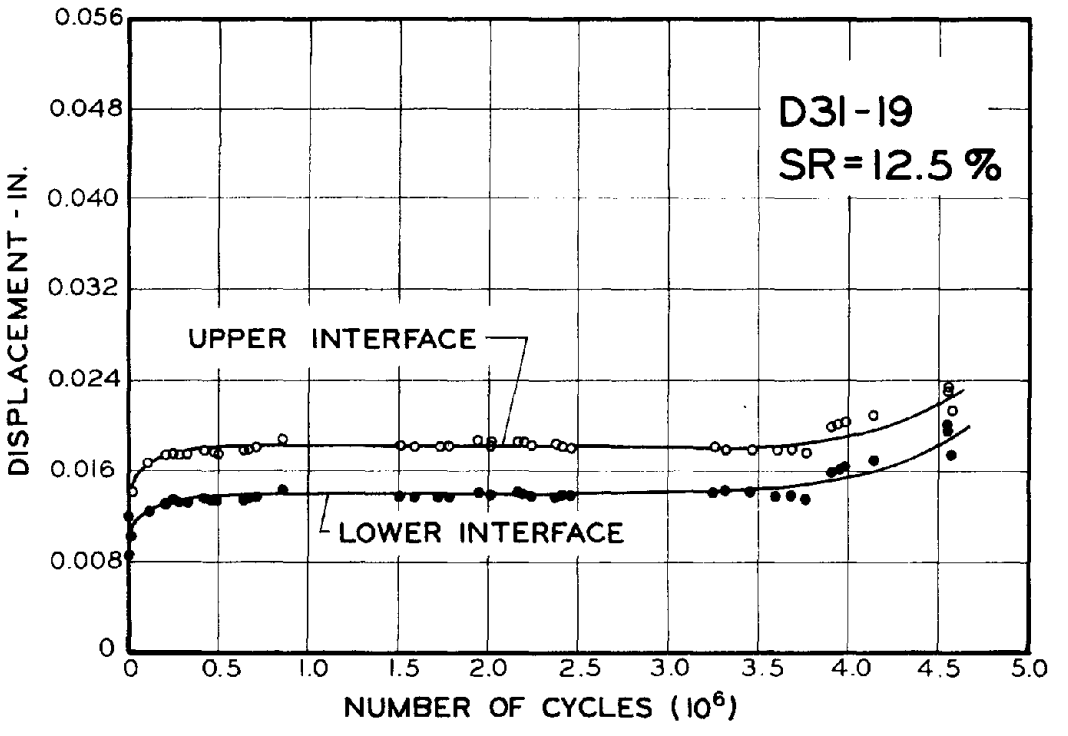

Figure 5.2. Typical Interface Displacement - Number of Cycles Relationship - Specimen No. D31-19

5.1.1 Number of Cycles-Displacement Relationship: The number of cycles (N) vs. the displacement at the interface were compared for each specimen. Typical results from this evaluation are presented in Figures 5.1and 5.2. In each of these figures a separate curve is presented for the upper and lower interface displacement of the specimen. In general the results of these two measurements are consistent with the only difference being in the magnitude of the displacement and not in the basic relationship. The variations in these readings are due to the relative rotation of the closure block under load. As a result the data was processed by combining the results from all four readings at both interfaces of each specimen. Results for the lower stress range cases are presented in Figures 5.3 and 5.4. It should be pointed out that the

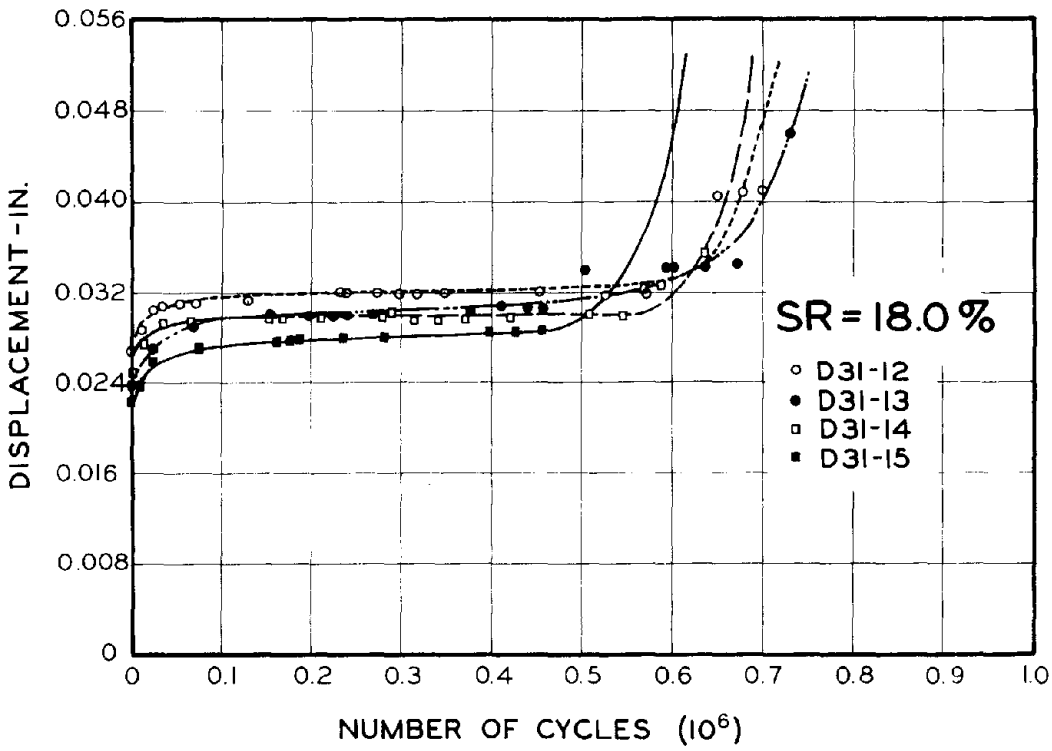

Figure 5.3 Average Interface Displacement vs. Number of Cycles for All Specimens at the Stress Range of 18%

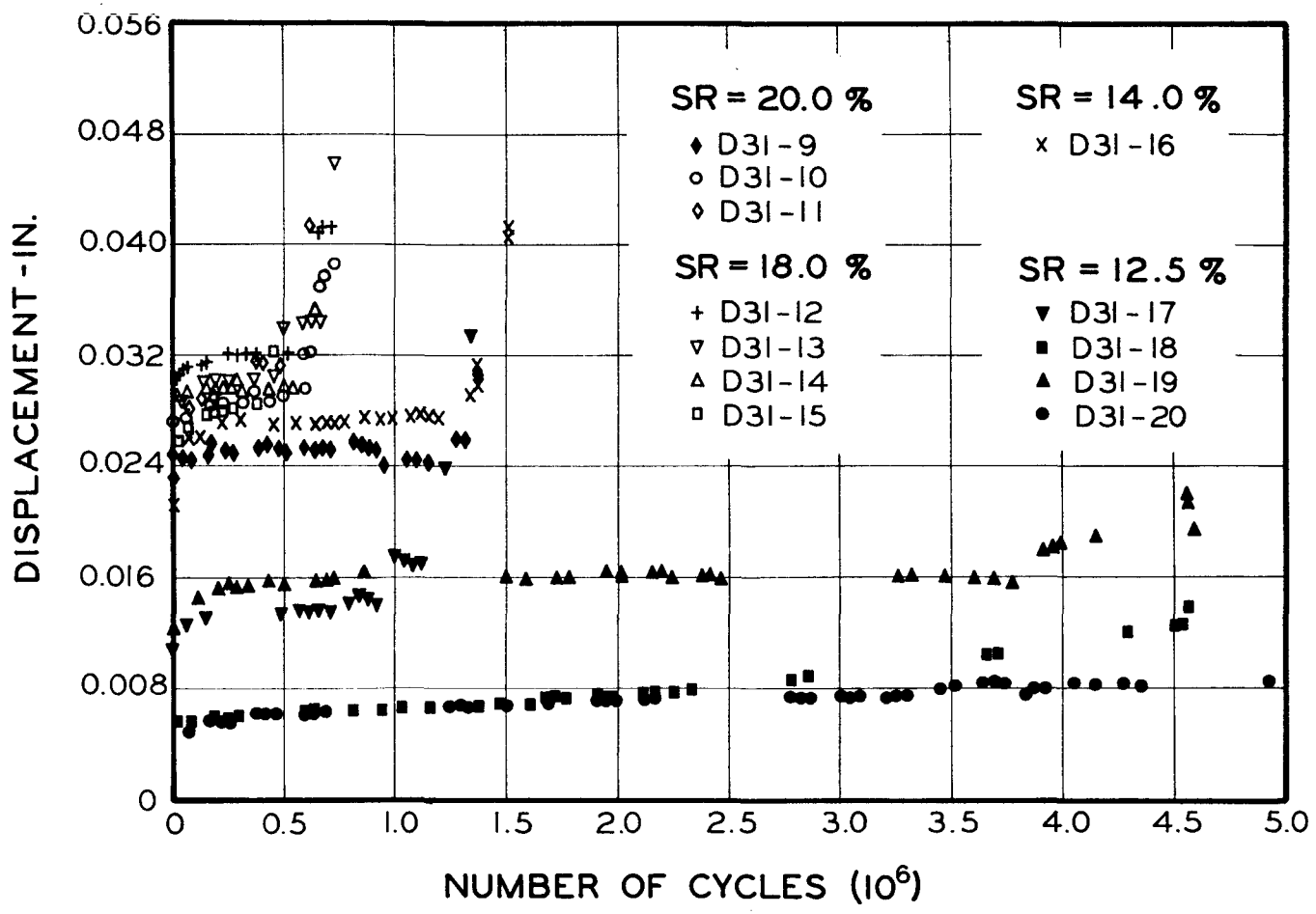

Figure 5.4. Average Interface Displacement vs. Number of Cycles for All Specimens at the Lower Stress Range

horizontal scale on these curves are different. However, it can be seen from either figure that the displacement reached a value in a small number of cycles which was maintained near constant until failure was approached. This general behavior pattern was consistent through all of the test results.

5.1.2 Log-Number of Cycles-Displacement Relationship: Even though the results from the number of cycles-displacement curves are very consistent, it has been established that the log N (number of cycles) produces a much more consistent result when considering the failure condition. As a result, the displacement vs. log N was examined and found to yield a very good comparison.

Typical results for a single stress range (20.0%) are presented in Figure 5.5. A combination of results from additional stress ranges are shown in Figure 5.6. It can be seen from these curves that the displacement

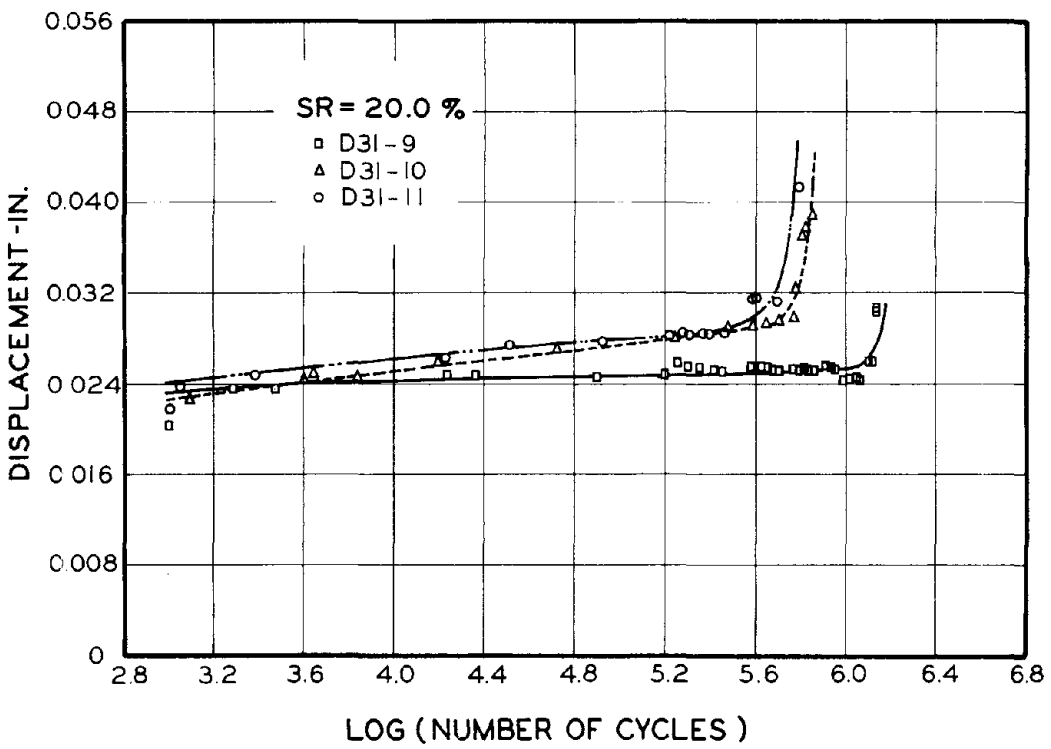

Figure 5.5 Typical Interface Displacement vs. Log Number of Cycles for All Specimens at the Stress Range of 20%

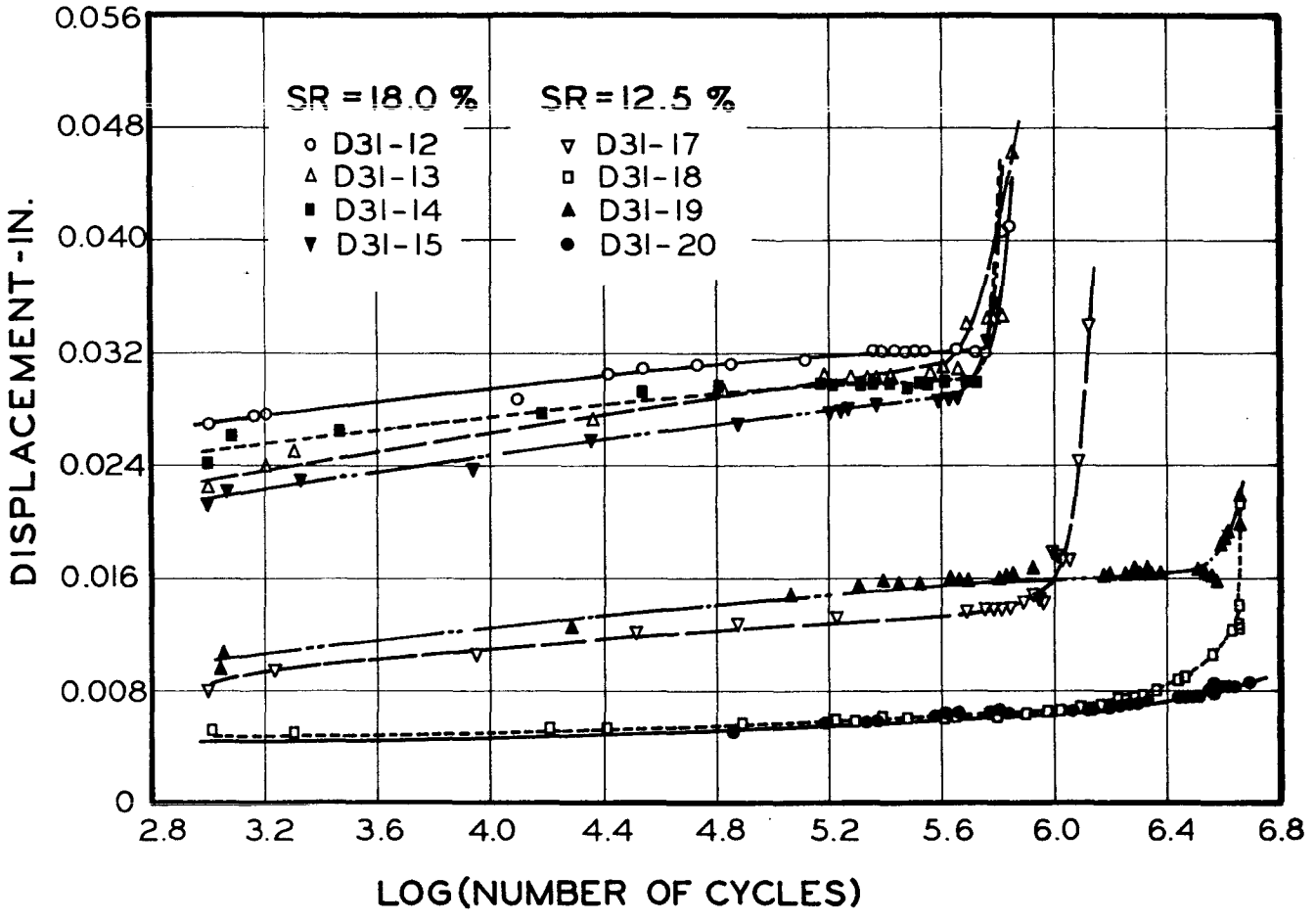

Figure 5.6. Interface Displacement vs. Log Number of Cycles for All Specimens at the Stress Range of 18% & 12.5%

increases with the increase in stress range even though it is difficult to find much consistency in 14.0, 18.0 and 20.0 percent stress ranges. Again it can be seen that the displacement reached a constant value and remained virtually constant until failure was imminent.

5.2 General Mode of Failure

In all tests failure of the specimen resulted from brittle fatigue fracture of the prestressing strand. The fractures would occur in a single wire followed in a short period of time by a second wire sometimes a third failure, with a delay prior to total tension failure while in some cases the total tension failure would occur simultaneously with the fracture of the third wire. The rate of the failure primarily depends upon the stress range of the specimen. The magnitude of the stress in the remaining wires after the first wire has broken would dictate the timing of the progressive failure. This failure sequence is apparent for the double specimen series when examining the number of cycles vs. displacement curves (Figures 5.1, 5.2, 5.3, 5.4). As failure is approached the displacements at the loaded end of the strand become nonlinear. In some cases, it was possible to physically hear the initial failure when in others it was not evident until the data was examined.

It was of interest to note that the fracture of the strand in all cases for the double specimen series and all but three cases for the single specimen series was at or very near the point where the strand entered the specimen. For the single specimen series this occurred either in the unbonded region or at the end of the masked section of the strand

and for the double specimen series at the specimen-closure interface. The three exceptions occurred in the specimens at a very high stress range (72.9%). In the first few cycles bond was lost between the strand and the concrete throughout the prebend length (from the loaded end of the strand to the bend). In these three tests failure occurred at the bend of the strand at a very low number of cycles. There was only a single wire failure in fatigue fracture with the remainder failing in the conventional tension mode.

In the double specimen series where strand gripping could not precipitate premature failure, all fractures were within one-half inch of the specimen closure interface. It appears that the stress concentration in the strand occurring at the crack produced a condition that controlled the failure. Even though the strand had considerable yielding due to the bend, this region of the connection was not of consequence in the failure.

5.3 Failure Relationships

The failure of each specimen was the result of fatigue fracture of the prestressing strand. With the failure mode of the connection under cyclic loading (representing service load conditions) established, the variable considered during testing was limited to stress range of the strand. The nature of the connection allowed both the maximum stress and the stress range to be varied while maintaining the minimum stress at zero and 13.0 ksi for the double and single specimens series respectively.

5.3.1 Double Specimen Series: A summary of test conditions and results for the double specimen series is shown in Table 5.1. In general these results are consistent considering the usual scatter for

TABLE 5.1 DOUBLE SPECIMEN SERIES

SPECIMEN NUMBER	STRESS RANGE % of 270 ksi	MAX STRESS ksi	MIN STRESS ksi	CYCLES AT FAILURE $X10^3$
D31-23	48.4	130.7	0	9.3
D31-24	48.4	130.7	0	9.2
D31-1	24.4	65.9	0	730.6
D31-2	24.4	65.9	0	274.4
D31-3	24.4	65.9	0	272.8
D31-4	24.4	65.9	0	338.6
D31-5	24.4	65.9	0	565.5
D31-6	24.4	65.9	0	354.6
D31-7	24.4	65.9	0	316.3
D31-9	20.0	54.0	0	1459.8
D31-10	20.0	54.0	0	765.8
D31-11	20.0	54.0	0	655.0
D31-12	18.0	48.4	0	732.1
D31-13	18.0	48.4	0	842.1
D31-14	18.0	48.4	0	669.5
D31-15	18.0	48.4	0	630.4
D31-16	14.0	37.8	0	1526.3
D31-17	12.5	33.75	0	1384.9[1]
D31-18	12.5	33.75	0	4566.0[2]
+	24.4	65.9	0	118.0
D31-19	12.5	33.75	0	4580.0[2]
+	24.4	65.9	0	104.2
D31-20	12.5	33.75	0	4980.0[2]
+	24.4	65.9	0	137.6
D31-21	±12.5	33.75	-0.65	2357.3[1]
D31-22	±12.5	33.75	-0.65	5291.7[2]
+	±24.4	65.9	-1.27	218.3

[1] There was a possibility that the specimen received an overload and slight damage in test preparation.

[2] The initial was terminated prior to failure and reloaded at the increased stress range.

fatigue testing. It should be pointed out that results from two specimens (D31-17, D31-21) are listed even though there was a good possibility that some damage and possible overloading could have occurred during preparation for testing.

Specimens tested in the lowest stress range (SR = 12.5) were not tested to failure at that load level. The specimens were loaded for 4.6 to 5.0 million cycles at which time the load was increased to a stress range of 24.4 where cycling was continued to failure. Both values are listed in Table 5.1. In order to evaluate the failure load Miner's Theory was applied.

$$\frac{n_i}{N_i} + \frac{n_j}{N_j} = 1.0$$

where n_i - number cycles at SR = 24.4

N_i - fatigue life at SR = 24.4

n_j - number of cycles at SR = 12.5

N_j - fatigue life at SR = 12.5

$$\therefore \quad N_j = \frac{n_j}{(1.0 - \frac{n_i}{N_i})}$$

An average of the failure values for SR = 24.4 was used for N_i (407,548). Results from this evaluation are listed in Table 5.2.

TABLE 5.2 MINER'S TECHNIQUE

SPECIMEN	n_i $x10^3$	n_i/N_i	n_j $x10^3$	N_j $x10^3$
D31-18	118.0	0.2896	4,566.0	6,427.2
D31-19	104.3	0.2557	4,580.0	6,153.8
D31-20	137.6	0.3375	4,980.0	7,517.0
D31-22	218.3	0.5356	5,291.7	11,394.4

The most meaningful evaluation of the results was obtained by comparing the stress range (SR) and the number of cycles at failure (N). This is presented as Figure 5.7 in the form of an SR vs. log N. curve. In addition to the data for the double specimen series, a second order curve based on a least square's fit to the data is presented. Due to the limited amount of data, a statistical evaluation was not performed.

The form of the curve presented in Figure 5.7 was selected to be consistent with previous research. Previous tests of either bonded or unbonded (in air) prestressing strand have minimum stress from 30 to 60 percent of the ultimate with stress ranges limited to a maximum of 20%. These conditions prevent any meaningful direct comparison of results; however, a curve based on work by Tide and VanHorn (12), is shown to illustrate the general form of previous results. The failure values for the untensioned strand are in general higher than those of tensioned strand which is consistent with previously reported results (7, 14). In these previously reported tests, when both tensioned and untensioned strand were included in the same specimen no cases of fracture of the untensioned strand were reported. This behavior is consistent with the results shown in Figure 5.7.

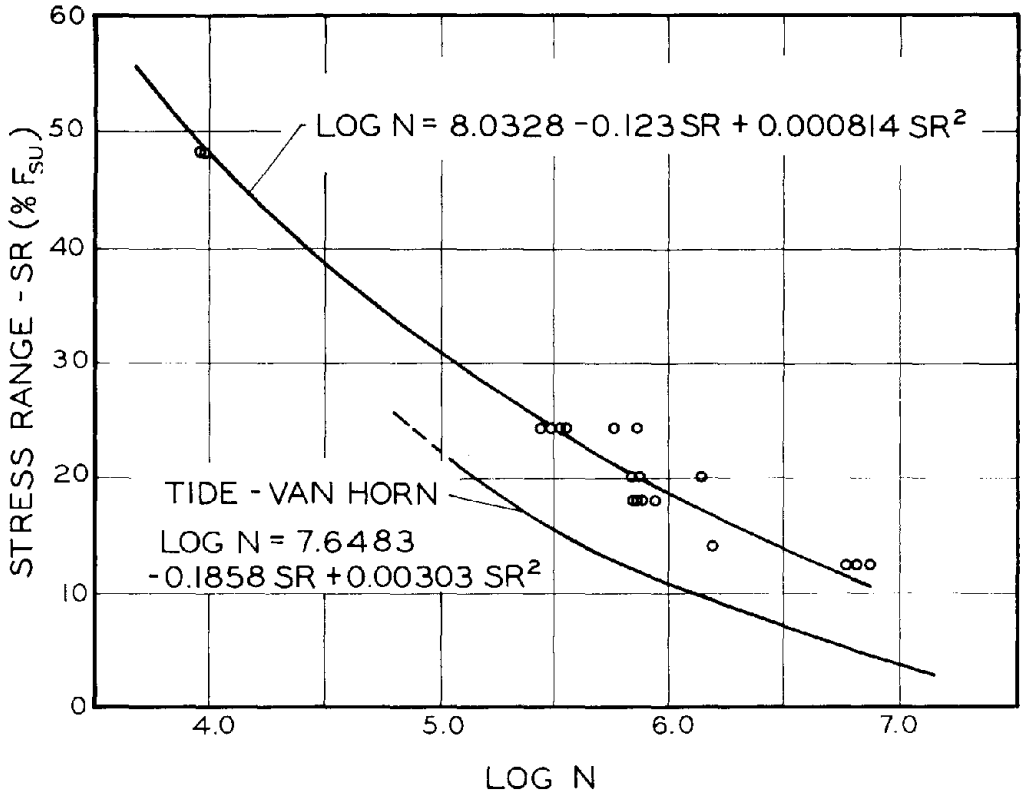

Figure 5.7 Stress Range vs. Log N for the Double Specimen Series

5.3.2 Single Specimen Series: Even though the single specimen series was of limited value in a quantitative sense, a summary of the test information is presented in Table 5.3. The initial specimens of this series failed due to a combination of strand fracture and crushing of the concrete in the region of the overlapping bends, or only crushing of concrete to such an extent that the test was discontinued. The high loads associated with these stress ranges caused crushing of the concrete between the bends of opposing strands which in turn resulted in general longitudinal splitting of the specimen. The first minor revision of the specimen was an increased length from 40" to 43" which along with additional spiral reinforcement eliminated the premature failure of the concrete.

TABLE 5.3 SINGLE SPECIMEN SERIES

SPECIMEN NUMBER	STRESS RANGE MAX. & MIN. STRESS	NO. OF CYCLES AT FAILURE	COMMENTS
FB40-13	72.9	22	Specimen failed by fracture of the strand after considerable cracking of the concrete
FB40-14	210 ksi -	106	
FB40-15	13.0 ksi	36	
FB40-16	68.8	850	Specimens failed by crushing of the concrete
FB40-17	177.1 ksi -	22	
FB40-18	13.0 ksi	80	
FB43-2	68.8	10,840	Strand fracture outside bonded region
FB43-3	177.1 ksi -	14,741	
FB43-4	13.0 ksi	14,407	
FB40-19	36.6	33,812	
FB40-20	111.8 ksi -	45,009	
FB40-21	13 ksi	28,110	
FB40-25	24.4	302,162	Strand fracture outside bonded region - when failure at the grips occurred the strand was regripped.
FB40-26	79.1 ksi -	234,489	
FB40-27	13.0 ksi	172,207	
FB40-28		192,217	
FB40-35	18.0	649,487	
FB40-36	61.7 ksi -	630,567	
	13.0 ksi		

The gripping of the strand remained a problem throughout this phase of the testing. However, the results shown in Table 5.3 represent failure of the strand away from the grips. It should be pointed out that in those cases where the stress range was less than 36.6%, the strands

were regripped several times during each test due to premature failure in the grips. Each failure of this type would produce a shock to the strand which undoubtedly affected the final failure condition.

On the other hand, the values when compared with the double specimen series are not inconsistent. The comparison of these values is shown in Figure 5.8. In addition a prediction equation is shown that considers the double specimen combined with single specimen values for stress ranges of 36.6 and 68.8 where regripping did not occur during testing. The values for 24.4 and 18.0 stress ranges shown in Figure 5.8 were not included in the development of the equation. The equation was developed from a least square fit to the data. The major revision to the equation occurred in the region of high stress ranges where both specimen tests series are valid.

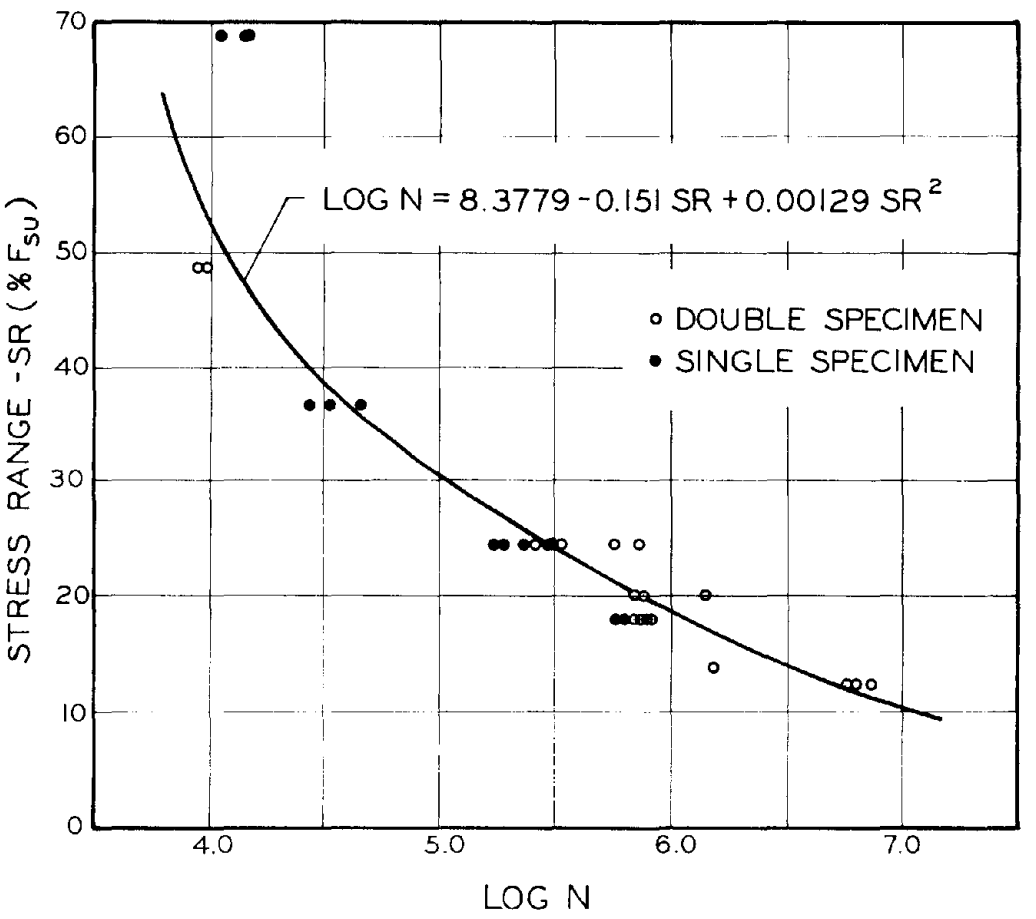

Figure 5.8 Stress Range vs Log N for the Combined Double and Single Specimen Series.

REFERENCES

1. Salmons, J.R. and Timothy E. McCrate, Bond of Untensioned Prestress Strand, Missouri Cooperative Highway Report 73-5A, University of Missouri-Columbia, Department of Civil Engineering, April 1973.

2. Salmons, J.R. and Gregory W. May, Strand Reinforcing for End Connections of Pretensioned I-Beam Bridges, Missouri Cooperative Highway Report 73-5B, University of Missouri-Columbia, Department of Civil Engineering, May 1974.

3. Salmons, J.R., End Connections of Pretensioned I-Beam Bridges, Missouri Cooperative Highway Report 73-5C, University of Missouri-Columbia, Department of Civil Engineering, June 1975.

4. ACI Committee 215, Considerations for the Design of Concrete Structures Subjected to Fatigue Loading, ACI Journal, Proceedings Vol. 71, No. 3, March 1974.

5. Hawkins, N.M., Fatigue Characteristics in Bond and Shear of Reinforced Concrete Beams, Abeles Symposium on Fatigue of Concrete, ACI SP-41, Detroit, 1974.

6. Hanson, John M., Hulsbos, Cornie L. and Van Horn, David A., Fatigue Tests of Prestressed Concrete I-Beams, Proceedings, ASCE, V, 96, ST11, Nov. 1970.

7. Abeles, Paul W., Brown, E.I.,II, and Hu, C.H., Fatigue Resistance of Under-Reinforced Prestressed Beams Subjected to Different Stress Ranges, Miner's Hypothesis. Abeles Symposium on Fatigue of Concrete, SP-41, American Concrete Institute, Detroit, 1974.

8. Fisher, J.W. and Viest, I.M. Fatigue Tests of Bridge Materials of the AASHO Road Test, Special Report No. 66, Highway Research Board, Washington, D.C., 1961.

9. Warner, R.F. and Hulsbos, C.L. Probable Fatigue Life of Prestressed Concrete Beams, Journal, Prestressed Concrete Institute, V.11, No. 2, April 1966.

10. Lane, R.E. and Ekberg, C.E., Jr., Repeated Load Tests on 7-Wire Prestressing Strands, Progress Report No. 223.21, Fritz Engineering Laboratory, Lehigh University, Bethlehem, Pa., 1959.

11. Hilmes, J.B., and Ekberg, C.E., Jr., Statistical Analysis of the Fatigue Characteristics of Under-Reinforced Prestressed Concrete Flexural Members, Iowa Engineering Experiment Station, Iowa State University, Ames, 1965.

12. Tide, R.H.R., and Van Horn, D.A., A Statistical Study of the Static and Fatigue Properties of High Strength Prestressing Strand, Report No. 309.2, Fritz Engineering Laboratory, Lehigh University Bethlehem, Pa, 1966.

13. Lin, T.Y., Partial Prestressing Design Philosophy and Approach, Symposium - Partial Prestressing Design Philosophies, ACI, CEB, PCI and FIP, Philadelphia, 1976 (reprinted FIP Note 69, July-August 1977).

14. Abeles, Paul W., Brown, Earl I.,II, and Hu, C.H., Behavior of Under-Reinforced Prestressed Concrete Beams Subjected to Different Stress Ranges, Abeles Symposium on Fatigue of Concrete, SP-41, American Concrete Institute, Detroit, 1974.

15. Bennett, E.W., Fatigue of Reinforcement in Beams with Limited Prestress, Abeles Symposium on Fatigue of Concrete, SP-41, American Concrete Institute, Detroit, 1974.

16. Rabbat, B.G., Kaar, P.H., Russell, H.G., and Bruce, R.N.,Jr., Fatigue Tests of Full-Size Prestressed Girders, Research Report No. 113, Portland Cement Association Research and Development Construction Technology Laboratories, Skokie, Illinois, June 1978.

17. Freyermuth, Clifford L., Design of Continuous Highway Bridges with Precast, Prestressed Concrete Girders, PCI Journal, Vol. 14, No. 2, April 1969.

18. Moments, Shears, and Reactions Continuous Highway Bridge Tables, American Institue of Steel Construction, Inc., 1959.

19. Building Code Requirements for Reinforced Concrete, (ACI 318-77), American Concrete Institute, Detroit Michigan, 1977.

20. Burnett, E.F.P., Hanson, N.W., Experimental Slab Suspension Tests, Interim Report - Task 9, Portland Cement Association Research and Development Construction Technology Laboratories, Skokie, Illinois, January 1977.

APPENDIX

APPENDIX A

DESIGN EXAMPLES

The following design cases are for the purpose of illustrating the procedure recommended for design of reinforcement to resist volume change forces when precast/prestressed I-beam bridge superstructures are made continuous. The basic approach is to cast the diaphragm at the beam ends with a bent strand connection which has moment capacity equal to that of the negative moment due to the dead load of the slab. Only that information pertinent to the connection design will be developed here with the remainder taken from other sources. Two cases are presented representing current extreme ends of the range of applicability for this type construction.

CASE NO. 1

The following is a four span 136 ft. precast/prestressed composite I-beam bridge used for the development of the test specimens used in the static test phase of previous research on the bent strand connection. The basic superstructure layout was as follows: (2)

General Bridge Layout:

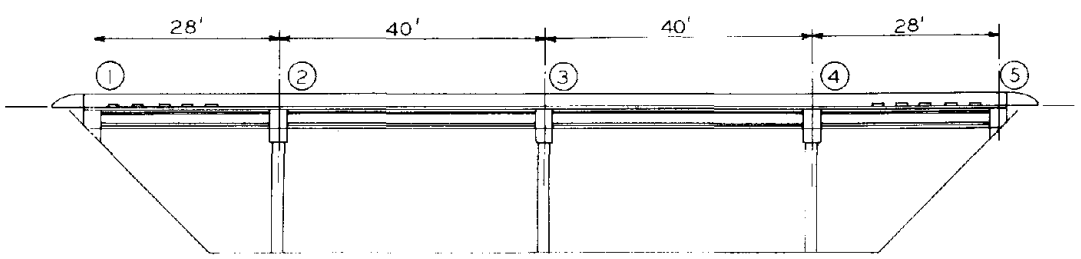

ELEVATION

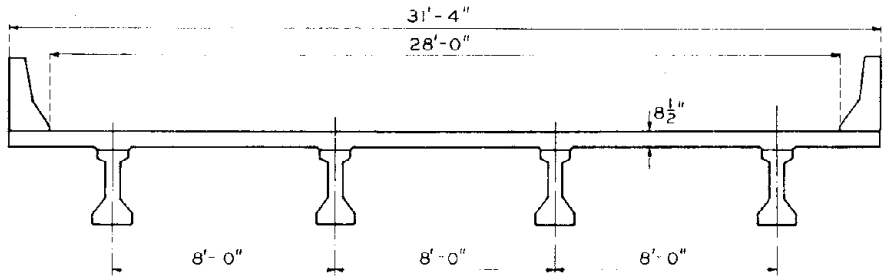

TYPICAL CROSS SECTION

DESIGN CRITERIA:

	Concrete Strength	E
Prestressed Beam at Release	4000 psi	3.66×10^3 ksi
Prestressed Beam at 28 days	5000 psi	4.05×10^3 ksi
Deck Slab and Diaphragm	4000 psi	3.66×10^3 ksi

LOADING: AASHTO HS20

PRESTRESSING STRAND: 1/2"ϕ-270^k Area = 0.153 in^2/strand

Final force (after losses) = 23.7 kip/strand

TYPICAL SECTION OF TYPE II

MISSOURI I-BEAM

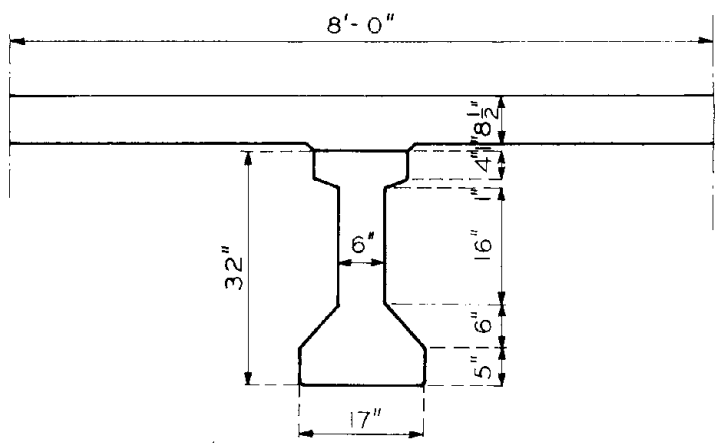

SECTION PROPERTIES:

Prestressed Beam

Area . . . . . 311.5 in^2
y^b . . . . . .14.05 in
I_t . . . . . .33,955 in^4
S^t . . . . . .1892 in^3
S^b . . . . . .2417 in^3

Composite Girder

Area . . . . . 1054.4 in^2
y . . . . . 30.34 in
I . . . . . 155,862 in^4
S^t . . . . . 93,893 in^3
S^{ts}_c . . . . . 13,966 in^3
S^b_c . . . . . 5,137.2 in^3

The following strand locations, design moments and beam stresses were determined from conventional design processes: (This design is a revision of that presented in report 73-6B(1) due to the increased slab thickness)

SIMPLE BEAM DL MOMENTS (40 FT. SPAN):

Beam M_{DL} = 60.8 ft.kips

Slab M_{DL} = 165.1 ft.kips

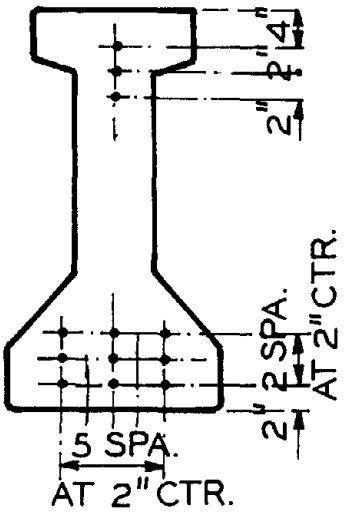

MOMENTS ON COMPOSITE SECTION:

Dead Load - Curb

+M = 15.04 ft.kips

-M = 25.14 ft.kips

Live load plus impact:

+M = 250 ft.kips

-M = -214.3 ft.kips

FINAL BEAM STRESSES:

MIDSPAN	ENDS
f^t = 1.694 ksi	f^t = 0.229 ksi
f^b = -0.257 ksi	f^b = 1.448 ksi

ULTIMATE NEGATIVE MOMENT AT CENTER SUPPORT:

M_u = 73.5 ft.kips

Required Reinforcing = 4.97 in^2

POSITIVE MOMENTS DUE TO VOLUME CHANGES IN THE BEAM AND LOADING IN REMOTE SPANS:

At pier 2; $+M_{uc}$ = 1941.1 in-kips (161.8 ft.kips)

At pier 3; $+M_{uc}$ = 1523.2 in-kips (126.9 ft.kips)

DESIGN OF BENT STRAND CONNECTION FOR NEGATIVE MOMENT FROM SLAB DEAD LOAD:

Moment coefficients from AISC are used (18)

Slab DL = 106.25 psf (850 plf for 8' beam span)

At pier 2 - $M_{DL} = 0.14865\ (0.85)(28)^2 = 99.06$ ft-kips

At pier 3 - $M_{DL} = 0.18155\ (0.85)(28)^2 = 120.99$ ft-kips

The maximum condition exists at pier 3:

Assume: jd = 0.95d = 0.95(26) = 24.7"

$$F = \frac{M}{jd} = \frac{120.99(12)}{24.7} = 58.78 \text{ kips}$$

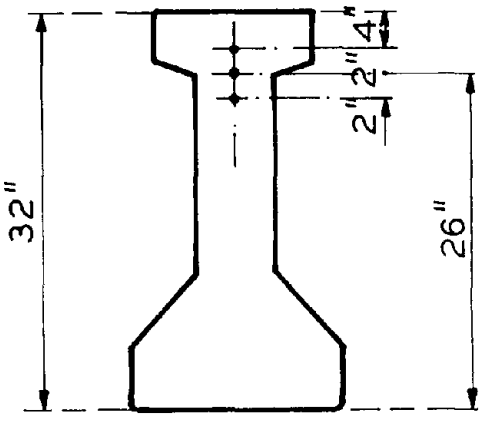

Utilizing the ties adjacent to the beam:

Assume: #4 tie on each side of the beam

tie F = 2(0.20)20 = 8 kips

Required force in the bent strand F_n = 58.78-8.0

for 2-bent strand = 50.78

$$\text{Req.} f_{ps} = \frac{50.78}{3(0.153)} = 110.6 \text{ ksi}$$

Assume L_e = 34"

Allow f_{ps} = 0.75 [6.14(34) - 50.61]

= 118.6 ksi > Req f_{ps} = 110.6 ksi

CHECK THE LENGTH OF NEGATIVE MOMENT AND MAXIMUM TENSION STRESS IN THE CONCRETE BEAM ENDS:

W_{DL} = (DL-SLAB)+(DL-BEAM) = 850+313 = 1163

$$M_D = \frac{W_{DL} L^2}{8}$$

$$M_0 = \frac{0.963(40)^2}{8} = 232.6 \text{ ft.kips}$$

$$M_S = 232.6 - \left(\frac{120.99 + 99.06}{2}\right)$$

M_S = 122.58

At X = 18.75' M = 204.43

$$X = \sqrt{\frac{\frac{122.58}{232.6}}{(20)^2}} = 14.5'$$

At the face of support:

M_{DL} = 204.43 - 122.58

= 81.85^{1k}

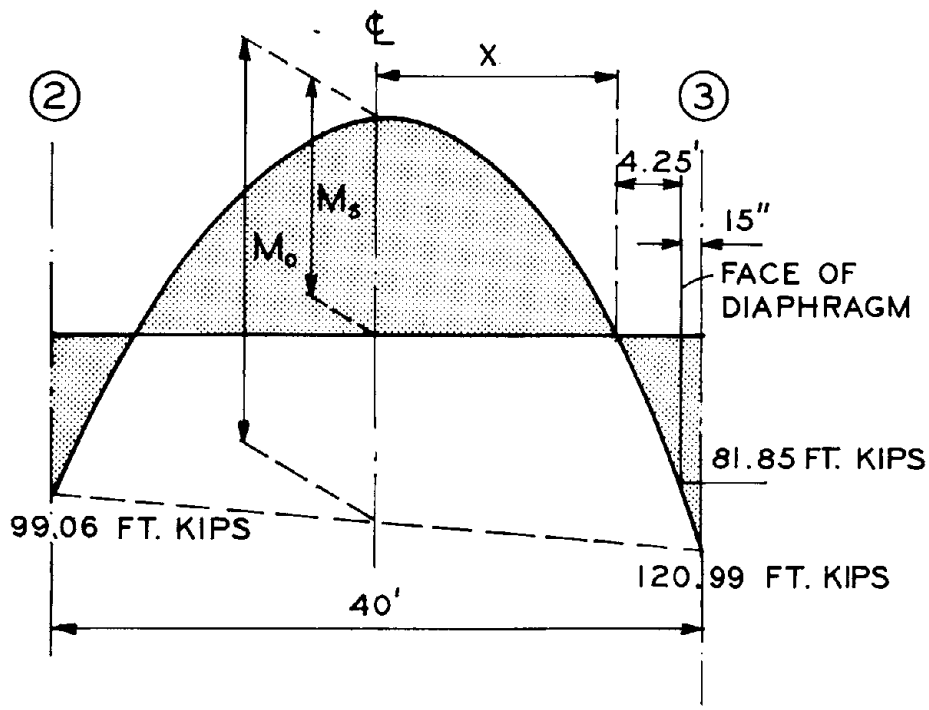

MAX. STRESS DUE TO DEAD LOADS: THE MOMENT AT PIER 3 IS CRITICAL UNDER DEAD LOADS

$$f^t = \frac{F}{A} - \frac{F_{eE}}{S^t} - \frac{M_{DL}}{S^t}$$

$$= \frac{284.4}{311.5} - \frac{284.4(4.55)}{1892} - \frac{81.85(12)}{1892} = -0.290 \text{ ksi} < 7.5 \quad f'c = 0.53 \text{ ksi}$$

$$f^b = \frac{F}{A} + \frac{F_e}{S^b} + \frac{M_{DL}}{S^b}$$

$$= \frac{284.4}{311.5} + \frac{784.4(4.55)}{2417} + \frac{81.85(12)}{2417} = 1.854 \text{ ksi}$$

Negative moment due to live load and impact combined with that from volume change, dead load of the slab and curb will be considered for final stress conditions.

NEGATIVE MOMENT APPLIED TO COMPOSITE SECTION:

$$-M_n = 214.3 + 25.14 = 239.44 \text{ ft.kips}$$

At the top of the slab

$$f^t = -\frac{[M_n - M_{vc}]\,12}{S_c^{ts}} = \frac{(239.44 - 126.9)12}{13966} = 0.0967 \text{ ksi}$$

This indicates that the slab will not crack under loads and probably gives the best estimate of bottom fiber stresses:

$$f^b = 1.854 + \frac{(239.44 - 126.9)12}{5137.2} = 2.117 \text{ ksi}$$

Prior to volume change losses $f^b = 2.413$ ksi. Should the assumption be made that the slab is cracked by other means equilibrium of the cracked section must be examined.

DESIGN OF BENT STRAND CONNECTION FOR VOLUME CHANGE POSITIVE MOMENT:

$$M_n = M_{vc} - M_{DL\ slab}$$

At Pier 2 $M_n = 161.8 - 99.06 = 62.74$ ft.kips

At Pier 3 $M_n = 126.9 - 120.99 = 5.91$ ft.kips

Critical moment for design - 62.74 ft.kips (752.88 in kips)

$d_{ps} = 32 + 1 + 6\ 1/2 - 3 = 36.5"$

$Jd_p = 0.94\ d_{ps} = 34.31"$, $d = 37.5$ $f_{ps} = 0.15(270) - 40.5$ ksi

$$\therefore \text{Approx. } A_{ps} = \frac{M - A_s f_s (Jd = d - d_{ps})}{f_{ps} jd}$$

$$A_{ps} = \frac{752.88 - 0.4(20)(34.31 + 37.5 - 36.5)}{40.5(34.31)}$$

$A_{ps} = 0.3385 \text{in}^2$

$$\text{No. Strand} = \frac{0.3385}{0.153} = 2.21 \text{ strand}$$

$\therefore$ Use the bottom row - 3 strands

Determine bending axis from the transformed section

$b = \frac{\ell}{4} = \frac{28'}{4} = 84"$ controls $\qquad d_p = 37.5" \qquad d = 37.5"$

$n_{ps} = \frac{E_{ps}}{E_c} = \frac{28.2}{3.6} = 7.8 \qquad n_s = \frac{30}{3.6} = 8.3$

$$b\frac{(kd)^2}{2} = (n_{ps}A_{ps} + n_sA_s)(d - kd)$$

$$\frac{84}{2}(kd)^2 = [7.8(3)0.153 + 8.3(0.4)](37.5-kd)$$

$$(kd)^2 + 0.1643\ kd = 6.161$$

$$kd = 2.4$$

Check of actual stress in strand:

$$f_{ps} = \frac{M-A_sf_y(d-\frac{kd}{3})}{A_{ps}(d_{ps} - \frac{kd}{3})} = \frac{752.88 - 0.4(20)(37.5 - \frac{2.4}{3})}{3(0.153)(27.5 - \frac{2.4}{3})}$$

$$f_{ps} = 37.48\ \text{ksi}\ (SR = 13.9\%)$$

DETAILS OF THE JOINT:

The joint details should have the following form:

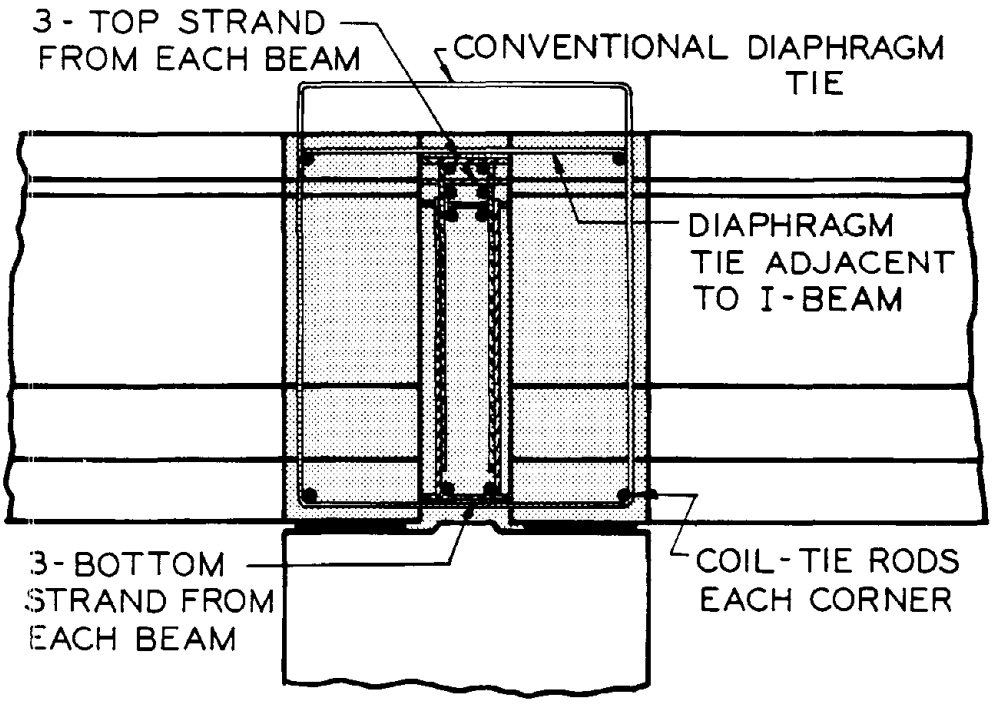

TYPICAL DIAPHRAGM CONNECTION

CASE NO. 2

The following is the connection design for a four span 520 ft. precast/prestressed composite I-beam bridge presented as an illustration for the method of calculating volume change forces (17). The details of the superstructure are taken directly from that report:

General Bridge Layout:

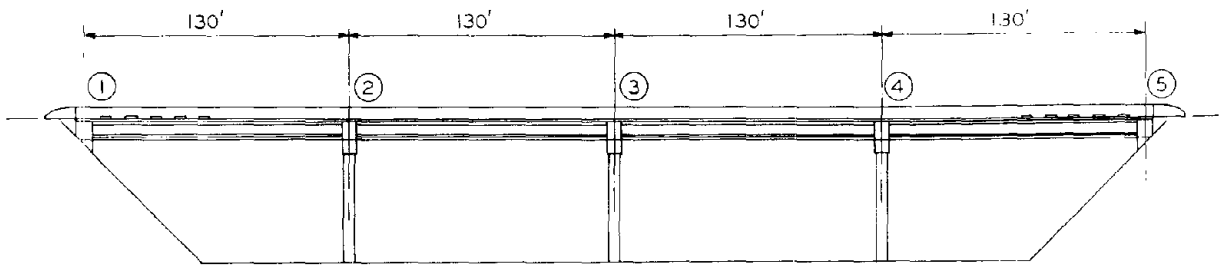

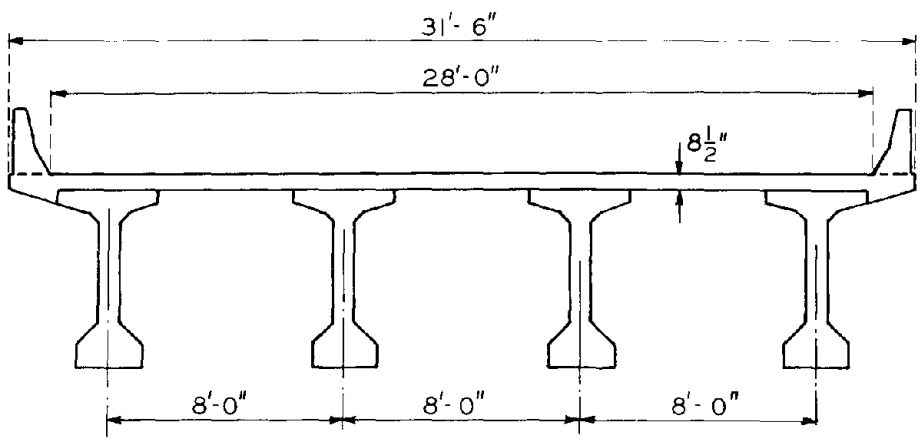

DESIGN CRITERIA

	Concrete Strength	E
Prestressed beam at release:	4000 psi	3.66×10^6 psi
Prestressed beam at 28 days:	5000 psi	4.05×10^6 psi
Deck slab and diaphragm:	4500 psi	3.88×10^6 psi

Loading: AASHO HS20-44

Prestressing strand: 1/2"ϕ, 270k

Area = 0.153 in.^{2}

Final force (after losses) = 23.6 k/strand

AASHTO Type VI
Girder

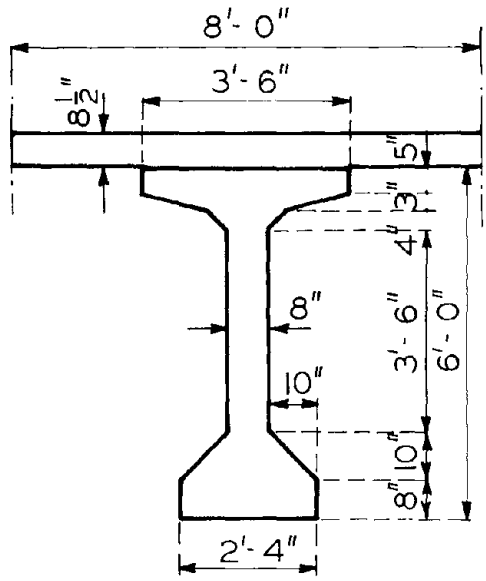

SECTION PROPERTIES

Prestressed beam

Area = 1085 in^2
$\bar{y}$ = 36.38 in
I = 733.320 in^4
S^t = 20,587 in^3
S^b = 20,157 in^3

Composite girder (interior)

Area = 1815 in^2
S_c^t = 73,057 in^3
S_c^b = 27,308 in^3
S_c^{ts} = 50,950 in^3
I = 1,431,189 in^4

The following strand locations, design moments and beam stresses were determined from conventional design procedure:

(Revisions to those presented in the original report (17) have been made due to an increased slab thickness)

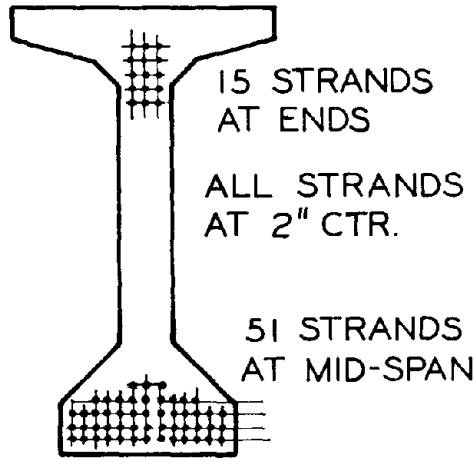

SIMPLE BEAM DEAD LOAD MOMENTS:

Beam M_{DL} = 2390 ft.kips

Slab M_{DL} = 1900 ft.kips

Diaphragm M_{DL} + 143

MOMENTS ON COMPOSITE SECTION:

Dead Load - Curb, parapet
at 443.5 plf
+M = 289.3 ft.kips
-M = 401.4 ft.kips

Live Load + Impact:
+M = 1403 ft.kips
-M = 1499 ft.kips at pier-2, 1359 ft-kips at pier 3

FINAL BEAM STRESSES:

Mid Span:	Ends:
f^t = 2.092 ksi	f^t = 0.207 ksi
f^b = 0.276 ksi	f^b = 2.031 ksi

ULTIMATE NEGATIVE MOMENT AT THE SUPPORTS:

M_u = 4751 ft.kips (2.5 load factor)
Required reinforcing: = 19.8 in^2

Positive moments due to volume changes in the beam and loading in remote spans:

At Pier 2 M_{vc} = 1145.2 ft.kips
At Pier 3 M_{vc} = 1068.5 ft.kips

DESIGN OF BENT STRAND CONNECTION FOR NEGATIVE MOMENT FROM SLAB DEADLOAD:

Moment coefficients from AISC are used (18).

At Pier 2 $M_{DL} = -0.1071\ W_{DL}L^2 = -0.1071\ (0.85)(130)^2 = 1538.5$ ft-kips
At Pier 3 $M_{DL} = -0.0714\ W_{DL}L^2 = -0.0714\ (0.85)(130)^2 = 1025.6$ ft.kips

The maximum condition exists at Pier 2:

Assume: Jd = 0.9d = 0.9(60) = 54"
Assume A d to the first diaphragm
Tie also equal to 60'

$$\therefore \text{Req } F = \frac{M}{Jd} = \frac{1538.5(12)}{54.0}$$

$$= 341.9 \text{ kips}$$

Utilizing the diaphragm tie adjacent to the beam:
Tie Force = 2(0.2)20 = 8.0 kips

Required Force in the bent strand tie F_n = 341.9 - 8.0
= 333.9

For 15 bent strand:

$$\text{Req } f_{ps} = \frac{333.9}{(0.153)} = 145.4 \text{ ksi}$$

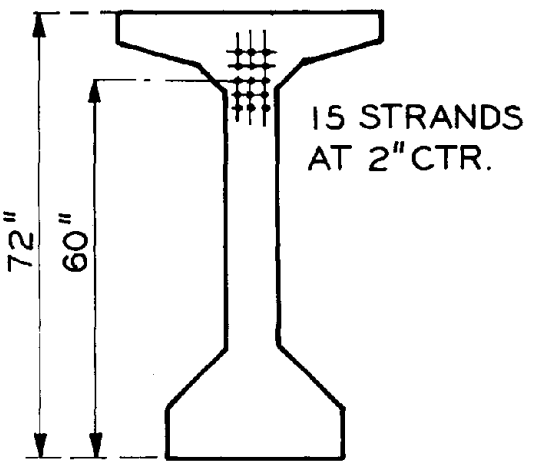

Assume L_e = 40":

Allowable f_{ps} = 0.75 [6.14(40) - 50.61]
= 146.2 ksi > Req f_{ps} = 145.4 ksi

Check of the length of negative moment and maximum tension stress in the concrete beam ends

W_{DL} = D.L. beam + D.L. slab = 1.130 + 0.85 = 1.98 k/ft

$$\therefore M_D = \frac{W_{DL}L^2}{8} = \frac{1.98(130)^2}{8} = 4182.75 \text{ ft.kips}$$

$f^t_{slab} = \frac{1657.4(12)}{46252} = 0.430$ psi $= 6.4\sqrt{f'_c}$ $7.5\sqrt{f'_c}$ For $f'_c = 4500$ psi

This indicates that the slab probably won't crack due to flexural stresses even though the reinforcing is based on a cracked section.

DESIGN OF BENT STRAND CONNECTION FOR VOLUME CHANGE POSITIVE MOMENTS:

$$M_n = M_{vc} - M_{DL\ slab}$$

At Pier 2 $M_n = 1145.2 - 1538.5 = 393$ ft.kips

At Pier 3 $M_n = 1068.5 - 1025.6 - 42.9$ ft,kips

Note that at Pier 2 the volume change moment does not exceed that induced by the continuity for slab dead load. However, the high negative moment induced by the continuity has been reduced considerably (the stress in the strand used for the negative moment connection is at $f_{ps} \doteq 35$ ksi which corresponds to SR $\doteq$ 12.8% which is at an acceptable level).

Critical moment for design - 42.9 ft.kips (514.8 in-kips)

$d_{ps} \doteq 72 + 6\ 1/w - 2 - 76.5"$

$d \doteq 75.5$

$jd_p \doteq 0.94\ d_{ps} = 0.94(76.5) = 71.9$

$f_{ps} = 0.15(270) = 40.5$ ksi

$$\text{Approx } A_{ps} = \frac{M = Asf_y(jd_p + d - d_{ps})}{f_{ps}jd}$$

$$= \frac{514.8 - 0.4(20)(71.9 + 75.5 - 76.5}{40.5(71.9)}$$

$= -0.018 in^2$ (This indicates that all volume change moment can be carried by the diaphragm ties.)

Use: 6 strand on bottom row as minimum

$b = 8(12) = 96"$ $\quad d_p = 76.5"$ $\quad d \doteq 76.5"$

$n_{ps} = 7.8,\quad n_s = 8.3$

$$b\frac{(kd)^2}{2} = (n_{ps}A_{ps} + n_sA_s)(d - kd)$$

$$48kd^2 = (7.8 \times 6 \times 0.153 + 0.4 \times 8.3)(76.5 - kd)$$

$$kd^2 + 0.2183kd = 16.7$$

$$kd = 3.98''$$

Assume all the moment is carried by the bent strand as an upper bound on the stress:

$$f_{ps} = \frac{M}{A_{ps}(d-\frac{kd}{3})} = \frac{514.8}{6(0.153)(75.17)} = 7.46\text{ksi} \quad (SR = 2.8\%)$$

Reinforcement details should be similar to that for the first case.

The two design cases were selected as limiting span lengths where single member precast/pretensioned prestressed bridge beams are practical. These cases present designs where first, a minimum reduction in positive volume change moment and corresponding slab dead load moment existed and second, a maximum slab dead load moment exceeds the anticipated volume change moment. In both cases the strand in the top of the section were adequate for development of the negative moment capacity for continuity for slab dead load. In addition the positive moment connection was designed without exceeding the specified stress range for the bottom bent strand without difficulty. It is anticipated that designs for spans within usual ranges can be made without difficulty. Even though the second case has large design moments with more difficult details, with care satisfactory designs can be made even in these span ranges.

APPENDIX B

EFFECTS OF STRAND DIAMETER ON STATIC FREE END SLIP

B1 PROBLEM

The initial static test program for determination of the capacity of bonded untensioned strand was for the most part conducted with ½" diameter Grade 270 ksi strand. There was a limited number of tests conducted with 3/8", 7/16" and 0.6" diameter strand in straight specimens with a single 30" embedment length. From these tests there was an indication that the general slip(perceivable slip at the unloaded end of the embedded strand) steel stress was unaffected by the strand diameter. These results were not consistent with the load transfer characteristics of bonded normal deformed reinforcing bar, transfer lengths of tensioned strand (19) or other preliminary evaluations of bonded untensioned strand (20). As a result of questions regarding these results and the limited number and scope of tests in the initial study, a test program was undertaken to verify the independence of the strand diameter and the general slip values or to develop relationships defining the interaction.

B2 TEST PROGRAM

The test specimens developed for the initial study proved satisfactory for static testing with both the straight and bend configuration. Therefore no alterations were made to the specimens for this second static testing sequence. The general configuration of bent strand specimens is illustrated in Figure 4.2. The configuration of the straight specimens is shown in Figure B1.

The general loading of both straight and bent strand specimens was also unchanged from the initial study. This loading arrangement for the

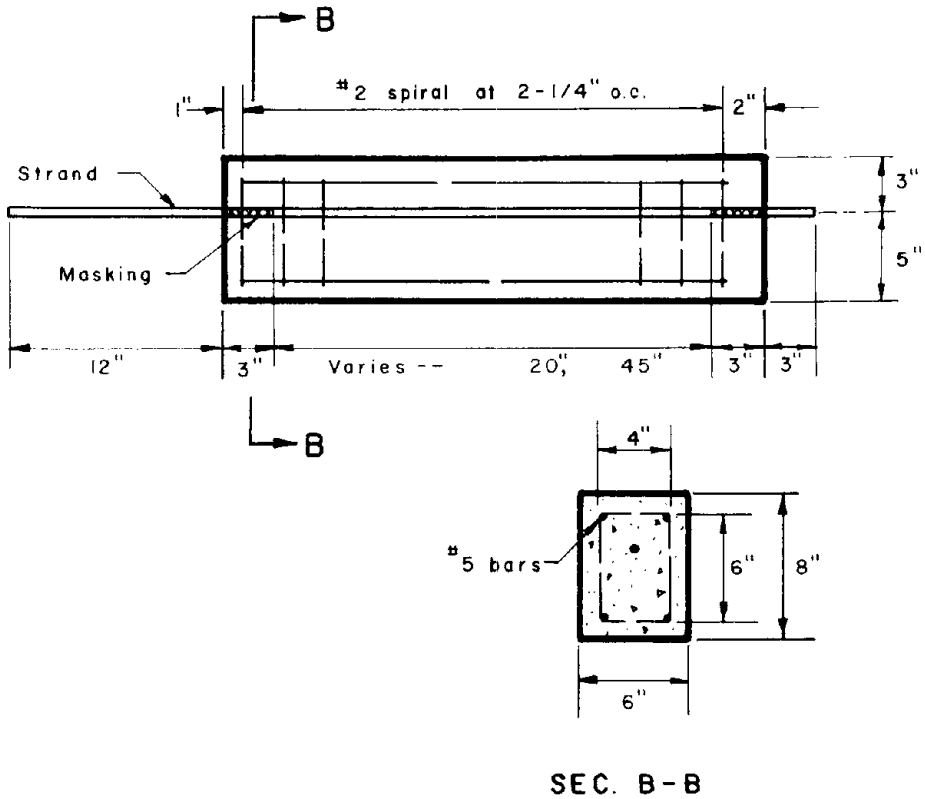

Figure B1. Straight Specimen Details

bent strand specimen is shown in Figure 4.1 while that for the straight specimen is given in Figure B2.

There were a total of 39 specimens, 18 straight and 21 bent, tested as part of this program. The number of specimens with particular embedment length with strand diameter for each configuration is tabulated in Table B1.

In general, the combination of strand diameters and embedment lengths was believed to be adequate to evaluate the effect of strand diameter on general slip.

All displacements were measured with 24 volt direct current differential

transformers (DCDT). The loaded end slips were measured with a tripod of 0.5" travel DCDT's in the form of an equilateral triangle. The DCDT's were attached to the triangular bracket in each corner and the bracket was clamped to the strand which passed through the centroid of the triangle. This arrangement compensated for any rotation in the bracket so a simple average of the three readings would give an accurate value for strand displacement. The free end slip was measured by 0.1" travel DCDT's attached directly to the strand.

The test specimen loading was provided by an MTS electronic servo controlled hydraulic loading system. This system has the ability to maintain a fixed load level with changing displacements. As a result, loads could be applied to the specimen and maintained until a stable condition was reached. Since the behavior of the bonded untensioned strand is highly time dependent, it was necessary to maintain the applied load at a consistent level for ½ to 3 hours to meet the stability criteria.

A limit for change in any displacement reading at a constant load was set at 0.0004 in. per min. Due to the physical arrangement of the DCDT's used to measure the loaded end displacement, the actual stability of the strand was much better than the least reading of a single DCDT.

Values of load were read directly with the displacement reading for each scan of the data. The loads were increased in increments of approximately 1.0 kip from zero to general slip or strand failure. This produced different stress increments for each strand size, but consistent values for any single group of strands. Also, a special strand vice was developed during the fatigue portion of the study which allowed the strand to be loaded to failure without precipitating failure in the grips.

B3 TEST RESULTS

DISPLACEMENT RELATIONSHIPS:

Displacement data was taken for all specimens during the tests. These measurements were made at both the loaded and the free ends of the strand. The general load deformation relationship was generated from the loaded end data while the point of general slip was determined from measurement of the free end slip. It was difficult to determine the exact general slip value in most cases and it was not possible to duplicate the more conservative results of the initial study. However, the load displacement curves were very consistent with the earlier work.

Relationships were independently developed for each group of specimens (equal strand diameter and straight or bent). Typical sets of data are shown in Figures B3 and B4. It can be seen from these figures that the data is very consistent and in a relatively tight band. It is of interest to note that data from both embedment lengths are included on each curve without any recognizable difference.

In addition to the individual sets of data, a composite of curves based on these individual diameter sequences were developed for both the straight and bent strand configurations. These results are shown in Figures B5 and B6 . In both figures, there is no attempt to show all the actual data points, but rather the data band. For each case there are approximately 400 data points within each band. For the straight strand case, there does not appear to be any variation that corresponds to the strand diameter. In both cases, the initial portion of the steel stress-slip relationships is consistent and appears to be independent of the strand diameter.

The only significant deviation occurs with the nonlinear range of the 0.6" diameter bent strand specimens. This deviation was evident in all

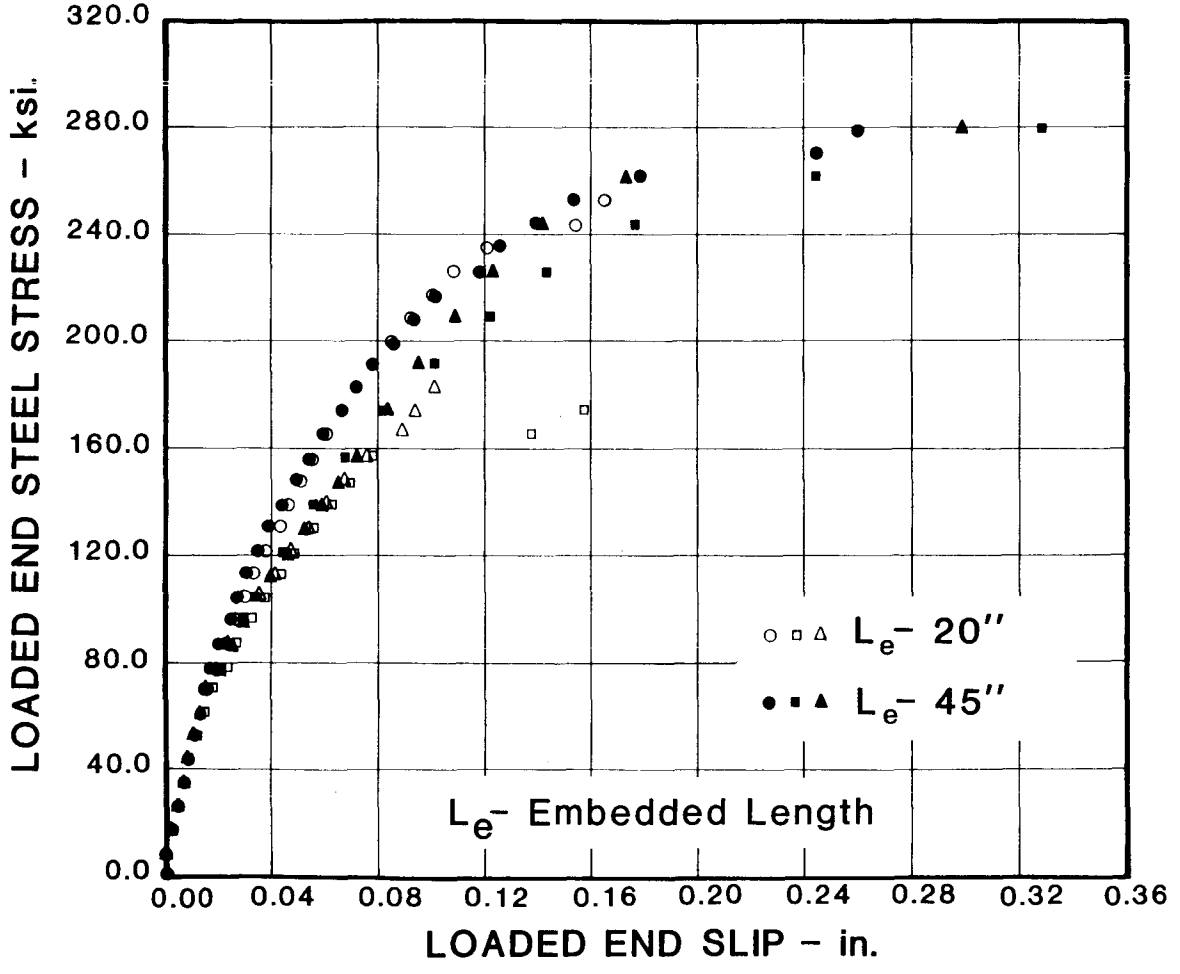

Figure B3. Typical Steel Stress vs. Slip for Straight-Strand Specimens. Diameter 7/16"

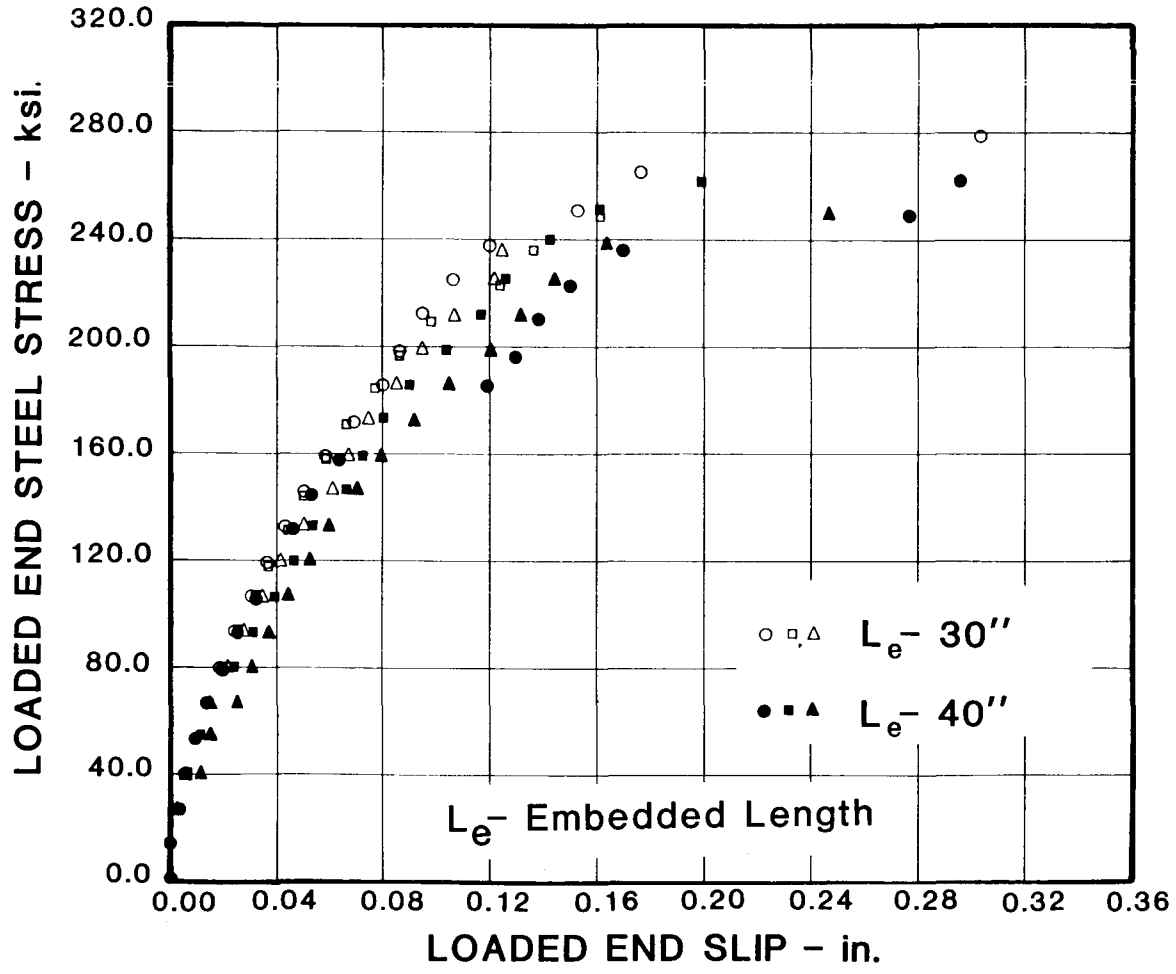

Figure B4. Typical Steel Stress vs. Slip for Bent Strand Specimens. Diameter - 7/16"

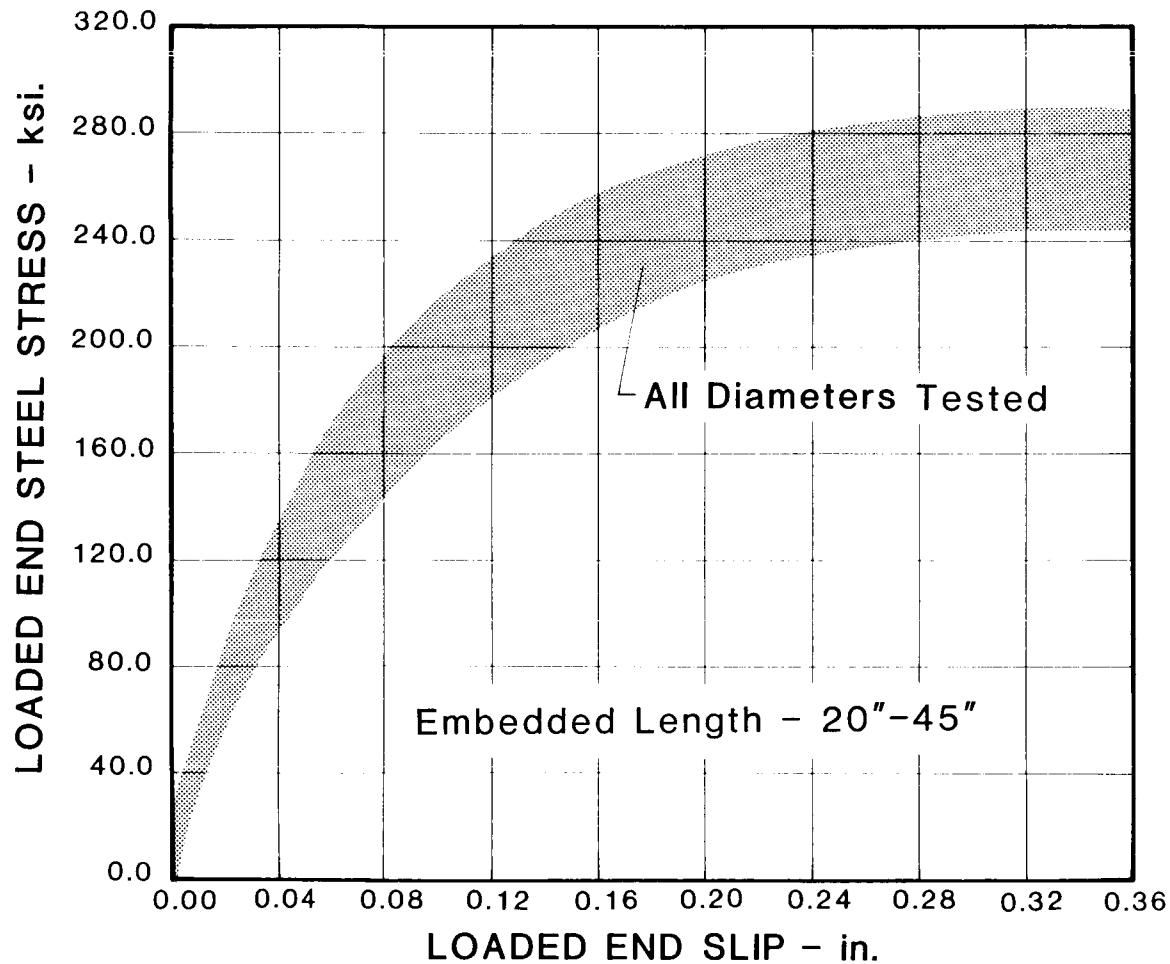

Figure B5. Steel Stress vs. Slip for
Straight Strand Specimens

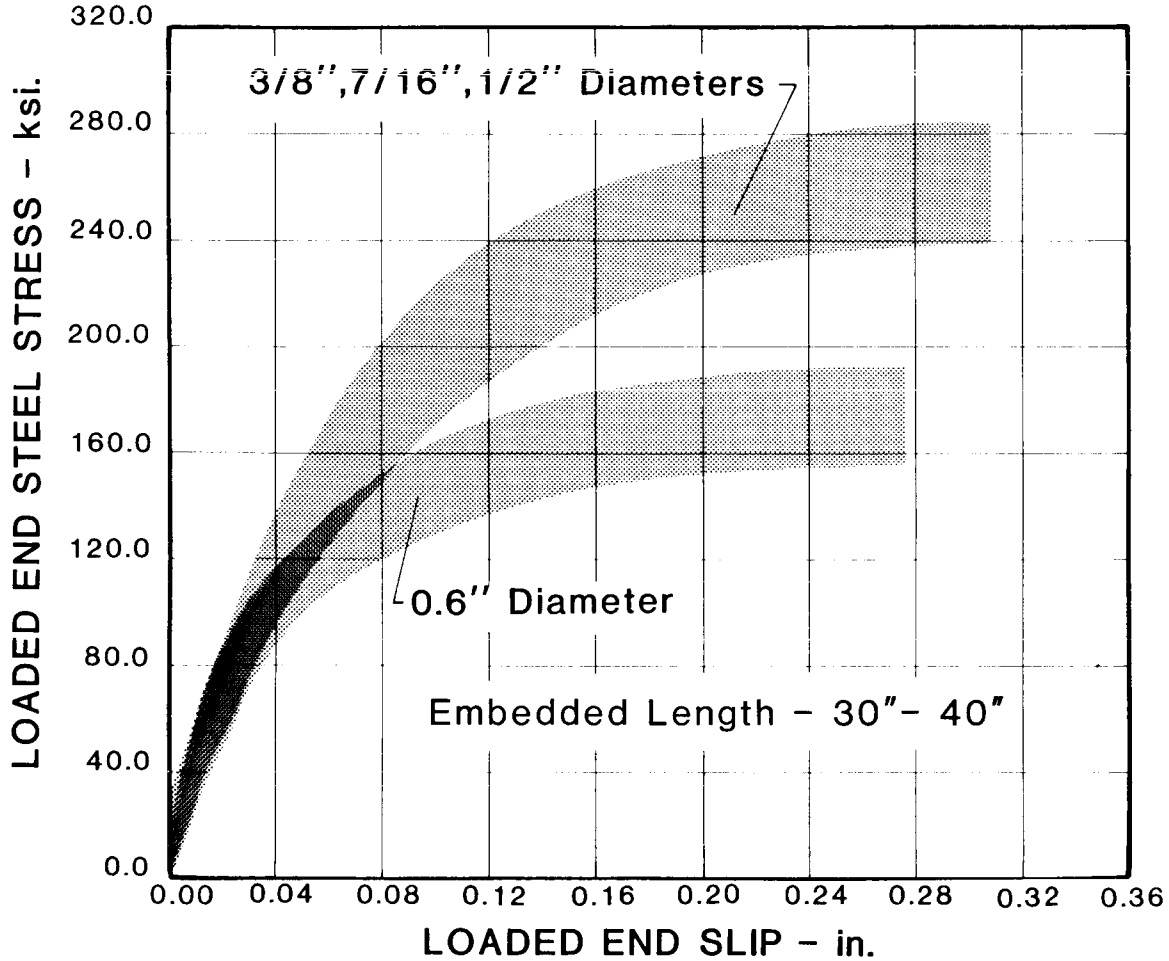

Figure B6. Steel Stress vs. Slip for
Bent Strand Specimens

specimens and started with the beginning of nonlinearity at approximately 120 ksi loaded end stress. A second data band is shown for the 0.6 in. diameter strand in Figure B6. There is no good explanation of this behavior since it did not occur in any of the smaller diameter sequences.

GENERAL SLIP:

Although the more conservative general slip values of the initial studies could not be duplicated in this sequence of tests, the variations with respect to strand diameters should be applicable to the former. The general slip values determined from this test sequence are tabulated in Table B2.

TABLE B2. AVERAGE GENERAL SLIP VALUES

	Straight Strand		Bent Strand	
Diameter	L_e=20"	L_e=45"	L_e=30"	L_e=40"
3/8"	216.4[3]	275.2[1]	257.15[1]	248.3[1]
7/16"	188.48	281.68	263.49[1]	256.56[1]
1/2"	-	-	-	241.84
0.6"	71.37	151.78	164.9[2]	157.7[2]

L_e= length of embedded strand

[1]The mode of failure for most specimens was fracture of the strand.

[2]The failure mode for these specimens were mixed with general slip and concrete cracking.

[3]All stresses are in ksi.

B4 CONCLUSIONS

From the test results it can be concluded that the static general slip value for bonded untensioned strand is not independent of the strand

diameter. When comparing results it appears that this relationship is approximately the same for both bent and straight strands. The following expression can be used as a conservative lower bound for general slip values for various strand diameters. For any value of embedment length

$$f_s = f_{s\frac{1}{2}} - 355.5\ (0.5 - D)$$

where: f_s - steel stress at general slip at L_e (ksi)

$f_{s\frac{1}{2}}$ - steel stress at general slip of ½" diameter strand at L_e (ksi)

l_e = length of the embedded strand (in)

D - diameter of strand (in)

The values resulting from this expression are normalized with respect to the steel stresses of the initial study and will be very conservative when compared to the results of the latter study.