MoDOT

Missouri Department of Transportation

Kansas City District
Daniel Niec, P.E., District Engineer

600 Northeast Colbern Rd.
816.622.6500
Fax: 816.622.6550
1.888.ASK MODOT (275.6636)

I do hereby certify that in accordance with the requirements of 23 CFR 635.411(a)(2), this patented or proprietary item is essential for synchronization with existing highway facilities.

Eric E Schroeter

Digitally signed by Eric E Schroeter
DN: cn=Eric E Schroeter, o=MoDOT, ou=Design, email=eric.schroeter@modot.mo.gov, c=US
Date: 2016.03.18 10:35:37 -05'00'

State Design Engineer

DATE: March 14, 2016

TO: Division Engineer, Design

Attn: Design Standards

FROM: Deborah Huffman, P.E.
Transportation Project Manager

SUBJECT: Route I-435, Clay County
Route 210 Interchange Redesign
Job No. J4I1980
Public Interest Finding Request

With reference to the above mentioned project, we request approval of a finding in the public interest to use KC Scout signal interconnect equipment within the project limits. The specification of this specific brand of ITS equipment is essential for synchronization and provides a consistent network for KC Scout to help Kansas City motorists navigate the region.

MoDOT Traffic desires to bring the I-435 and Route 210 signal interconnect back to the MoDOT District Office over the Scout telecommunications network. If the construction project does not install IFS Ethernet transceivers and a Cisco switch along the Route 210 signal interconnect, then there is a high probability that the Scout firewall will not allow the signal communications to reach MoDOT's central signal server.

MoDOT staff believes that it is in the public's best interest that IFS Ethernet transceivers along with an 8-port Cisco switch be specifically required for this construction project. Any alternative private communication option would be considerably more costly and it would not have near the reliability that the Scout fiber optic network has.

Approval of this request at your earliest convenience would be appreciated. This project is scheduled for a June 24, 2016 bid letting. Please contact me or Mark Sommerhauser, KC Scout Project Manager, at (816) 607-2243 with any questions.

MISSOURI HIGHWAYS AND TRANSPORTATION COMMISSION
PLANS FOR PROPOSED
STATE HIGHWAY
FINAL PLANS
CLAY COUNTY

DESIGN DESIGNATION

I-435
CLASSIFICATION - INTERSTATE
A.D.T. - 2014 = 70.077
A.D.T. - 2034 = 126.139
D.H.V. = 10%
T = 10.9%
V = 65 M.P.H.

ROUTE 210
CLASSIFICATION - PRINCIPAL URBAN ARTERIAL
A.D.T. - 2014 = 21.100
A.D.T. - 2034 = 45.600
D.H.V. = 13%
T = 28%
V = 45 M.P.H.

NO RIGHT-OF-WAY ACQUISITION

CONVENTIONAL SYMBOLS
(USED IN PLANS)

	EXISTING	NEW
BUILDINGS AND STRUCTURES		
GUARD RAIL		
CONCRETE RIGHT-OF-WAY MARKER		
STEEL RIGHT-OF-WAY MARKER		
LOCATION SURVEY MARKER		
UTILITIES		
FIBER OPTICS	FO	FO
OVERHEAD TELEPHONE		
UNDERGROUND TELEPHONE	T	T
OVERHEAD POWER		
UNDERGROUND POWER	P	P
GAS	G	G
WATER	W	W
MANHOLE	SAN	
FIRE HYDRANT	FH	
WATER VALVE	W	
WATER METER	W	
DROP INLET		
DITCH BLOCK		
GROUND MOUNTED SIGN	SIGN	
LIGHT POLE		
H-FRAME POWER POLE		
TELEPHONE PEDESTAL		
FENCE		
CHAIN LINK	V	
WOVEN WIRE		
GATE POST		
BENCHMARK	BM	

NOTE: DASHED OR OPEN SYMBOLS INDICATE EXISTING FEATURES

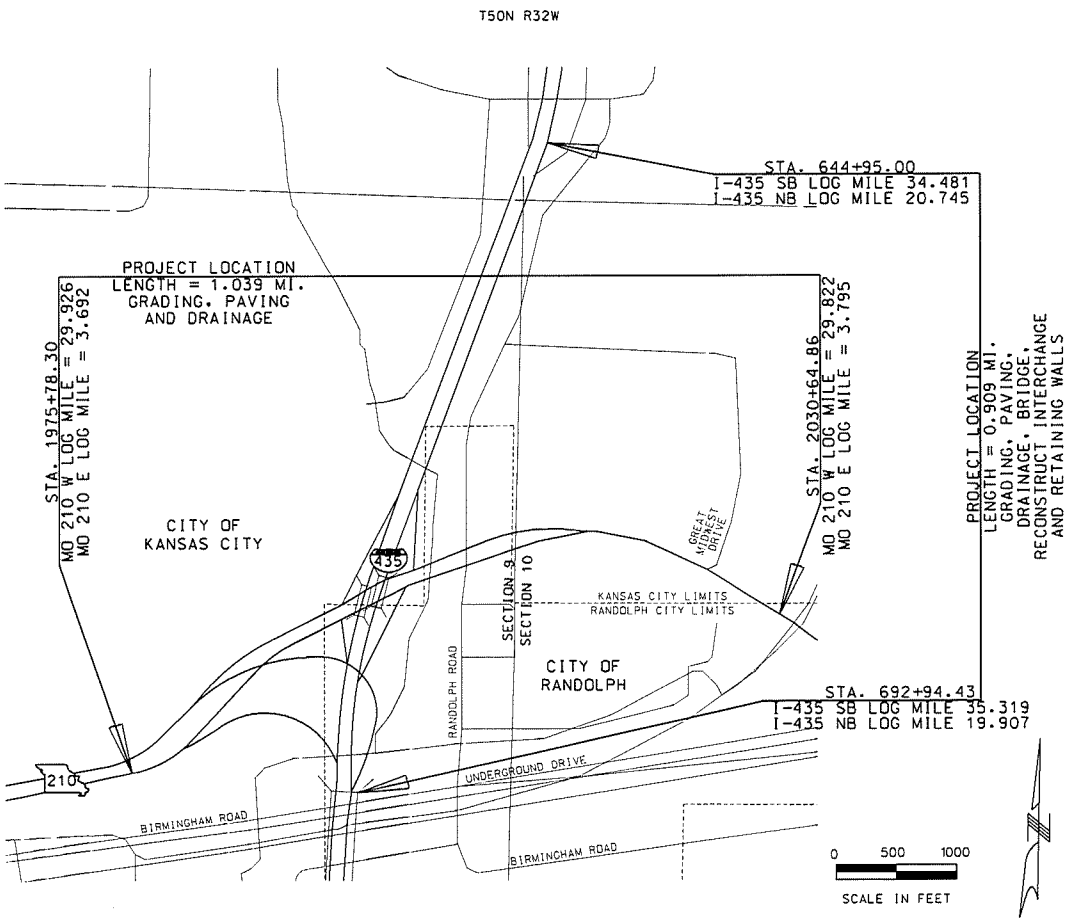

INDEX OF SHEETS

DESCRIPTION	SHEET NUMBER
TITLE SHEET	1
TYPICAL SECTIONS (TS) (34 SHEETS)	2
QUANTITIES (QU) (27 SHEETS)	3
PLAN-PROFILE (PP)	4 - 39
DRAINAGE PLAN (DP)	40 - 47
REFERENCE POINTS (RP)	48
COORDINATE POINTS (CP)	49 - 52
SPECIAL SHEETS (SS)	53 - 73
INTERSECTION DETAILS	53 - 62
RETAINING WALL KC-0094	63
RETAINING WALL KC-0095	64
RETAINING WALL KC-0096	65
RETAINING WALL DETAIL	66
MISC. DETAILS	67 - 73
TRAFFIC CONTROL SHEETS (TC)	74 - 173
EROSION CONTROL (EC)	174 - 179
ITS SHEETS	180 - 189
LIGHTING (LT)	190 - 200
SIGNALS (SG)	201 - 223
SIGNING (SN)	224 - 255
PAVEMENT MARKING (PM)	256 - 267
CULVERT SECTIONS (CS)	268 - 281
BRIDGE DRAWINGS	
A8178	1 - 39
A8179	1 - 33
A8287	1 - 3
A8288	1 - 3
CROSS SECTIONS (XS)	1 - 117

LENGTH OF PROJECT

I-435:

BEGINNING OF PROJECT	STA. 644+95.00
END OF PROJECT	STA. 692+94.43
APPARENT LENGTH	4799.4 FEET

MO 210:

BEGINNING OF PROJECT	STA. 1975+78.30
END OF PROJECT	STA. 2030+64.86
APPARENT LENGTH	5486.6 FEET

EQUATIONS AND EXCEPTIONS	
TOTAL CORRECTIONS	0 FEET
NET LENGTH OF PROJECT	10286.0 FEET
STATE LENGTH	1.948 MILES

STATE OF MISSOURI
BARBARA L. WELLS
NUMBER PE-2009030026
PROFESSIONAL ENGINEER
THIS SHEET HAS BEEN SIGNED, SEALED AND DATED ELECTRONICALLY.

DATE	04/30/15
DATE PREPARED	04/30/15
ROUTE I-435	STATE MO
DISTRICT KC	SHEET NO. 1
COUNTY CLAY	
JOB NO. J4I1980	
CONTRACT ID. -	
PROJECT NO. -	
BRIDGE NO. -	

DATE	DESCRIPTION

MISSOURI HIGHWAYS AND TRANSPORTATION COMMISSION
105 WEST CAPITOL
JEFFERSON CITY, MO 65102
1-888-ASK-MODOT (1-888-275-6636)

CDM Smith
9200 Ward Parkway
Kansas City, MO 64114
816.444.8270
www.cdmsmith.com

CDM SMITH, INC.
PRO. ENGINEER 001431

BARBARA L. WELLS
PROFESSIONAL ENGINEER
2009030026

REV.

P:\99815 435-210 Interchange\Microstation\Plans\001_TITLE_J4I1980_I435.dgn 10:27:56 AM 2/3/2016

GENERAL NOTES:

1. ALL REFERENCES TO STANDARD PLANS/DETAILS ARE IN REFERNCE TO MODOT STANDARDS UNLESS OTHERWISE NOTED.
2. CENTURYLINK FIBER OPTIC CABLE RUNS ALONG THE PROJECT CORRIDOR. THE CONTRACTOR SHALL FIELD VERIFY THE LOCATION OF THE FIBER OPTIC CABLE PRIOR TO CONSTRUCTION IN THAT AREA.
3. ALL ITS ELEMENTS SHALL BE WIRED ACCORDING TO MANUFACTURER'S WIRING DIAGRAMS.
4. PROPOSED ITS IMPROVEMENTS AND EQUIPMENT LOCATIONS ARE APPROXIMATE; LOCATIONS MAY BE MODIFIED TO AVOID UTILITIES AND OTHER OBSTRUCTIONS IF APPROVED BY THE ENGINEER IN ADVANCE.
5. ALL ELECTRICAL WORK AND WIRING SHALL CONFORM TO THE LATEST EDITION OF THE NATIONAL ELECTRICAL CODE.
6. ALL ELECTIRAL WORK AND MATERIALS SHALL COMPLY WITH MODOT STANDARD SPECIFICATIONS.

LEGEND

- CCTV CAMERA
- BASE MOUNTED SCOUT CABINET
- (ITS) SCOUT FIBER SPLICE VAULT WITH SPLICING
- (ITS) PULL BOX, CLASS 5 MODIFIED
- CENTURY LINK BOX
- PULL BOX, CLASS 1
- POWER SOURCE
- POWER POLE, EXISTING
- RADAR DETECTOR
- RWIS ENVIRONMENTAL SENSOR UNIT
- OVERHEAD POWER CABLE
- CONDUIT, PUSHED
- CONDUIT, TRENCHED
- CONDUIT, EXISTING
- FIBER OPTIC CABLE, EXISTING

ITS SHEETS
SHEET 1 OF 10

SCOUT SYSTEM
GENERAL NOTES

STATE OF MISSOURI
THOMAS P. EVANS
NUMBER E-29253
REGISTERED PROFESSIONAL ENGINEER

DATE PREPARED	01-12-2015
ROUTE	I-435
STATE	MO
DISTRICT	KC
SHEET NO.	180
COUNTY	CLAY
JOB NO.	J411980
CONTRACT ID.	
PROJECT NO.	
BRIDGE NO.	

DATE	DESCRIPTION

MISSOURI HIGHWAYS AND TRANSPORTATION COMMISSION

MoDOT

105 WEST CAPITOL
JEFFERSON CITY, MO 65102
1-888-ASK-MODOT (1-888-275-6636)

TREKK DESIGN GROUP, LLC

1441 East 104th St., Suite 100
Kansas City, MO 64131
Tel (816) 874-4455
Fax (816) 874-4878
www.trekkdesigngroup.com

Missouri Cert. of Authority 2002016300

IF A SEAL IS PRESENT ON THIS SHEET IT HAS BEEN ELECTRONICALLY SEALED AND DATED.

G:\13-075 CDM Smith - MoDOT Route 210_I-435 Interchange\Sheets\180_ITS_01_J411980_120_GENNOTES.dgn 4:51:58 PM 01-12-2015

PLAN NOTES:

1) ALL LOCATIONS ARE APPROXIMATE

2) CONTRACTORS MUST VERIFY LOCATION BEFORE REMOVAL,EXCAVATION AND RELOCATION

LEGEND

- CCTV CAMERA
- BASE MOUNTED SCOUT CABINET
- (ITS) SCOUT FIBER SPLICE VAULT WITH SPLICING
- (ITS) PULL BOX, MODIFIED TYPE 5
- CENTURY LINK BOX
- PULL BOX, CLASS 1
- POWER SUPPLY ASSEMBLY
- RADAR
- RWIS ENVIRONMENTAL SENSOR UNIT
- CONDUIT, PUSHED
- CONDUIT, TRENCHED

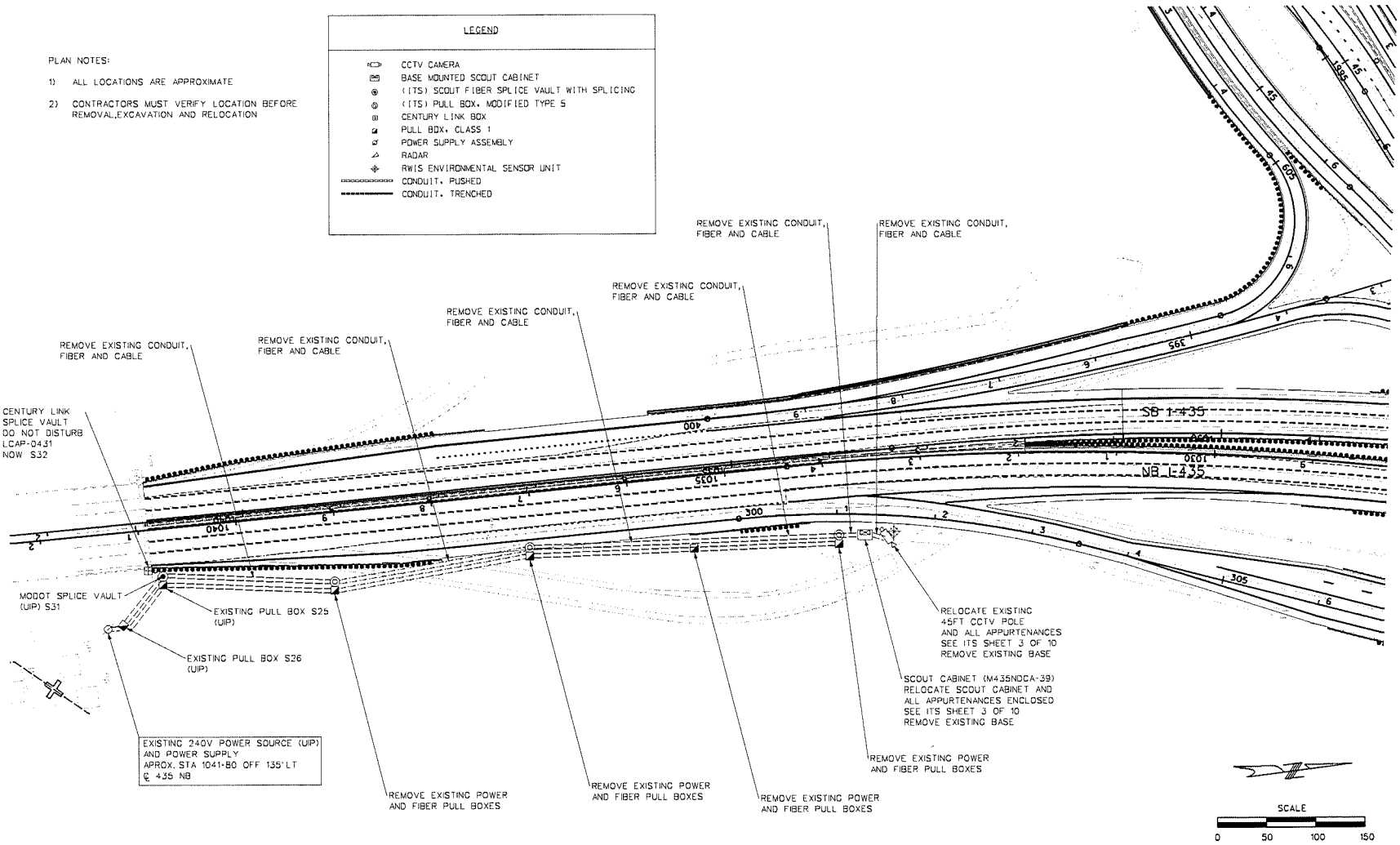

ITS SHEETS
SHEET 2 OF 10

I-435 EXISTING ITS
EXISTING SITE PLAN

STATE OF MISSOURI
THOMAS P. EVANS
NUMBER E-29253
REGISTERED PROFESSIONAL ENGINEER

DATE PREPARED	01-12-2015
ROUTE I-435	STATE MO
DISTRICT KC	SHEET NO. 181
COUNTY CLAY	
JOB NO. J4I1980	
CONTRACT ID.	
PROJECT NO.	
BRIDGE NO.	

DATE	DESCRIPTION

MISSOURI HIGHWAYS AND TRANSPORTATION COMMISSION

MoDOT
105 WEST CAPITOL
JEFFERSON CITY, MO 65102
1-888-ASK-MODOT (1-888-275-6636)

TREK DESIGN GROUP, LLC
1441 East 104th St., Suite 103
Kansas City, MO 64131
Tel (816) 874-4433
Fax (816) 874-4475
www.trekdesigngroup.com
Missouri Cert. of Authority 2002016300

IF A SEAL IS PRESENT ON THIS SHEET IT HAS BEEN ELECTRONICALLY SEALED AND DATED.

C:\13-075 CDM Smith - MoDOT Route 210_I-435 Interchange\Sheets\181_ITS_02_J411980_I50.dgn 4:52:08 PM 01-12-2015

PLAN NOTES:

1) ALL LOCATIONS ARE APPROXIMATE

2) CONTRACTORS MUST VERIFY LOCATION BEFORE REMOVAL,EXCAVATION AND RELOCATION

3) CONDUITS FROM S27 AND S19 PULL BOXES TO CONTROLLER CABINET ARE 2" RIGID PVC. NO DIRECT PAY FOR THIS ITEM.

4) CONDUIT FROM CONTROLLER TO CCTV POLE IS 3" RIGID PVC. SEE DETAIL SHEETS FOR AUXILLARY AND GROUNDING. NO DIRECT PAY FOR THIS ITEM.

5) FOR SIGNAL INTERCONNECT SEE SHEET 4 OF 10.

6) THERE IS 60' ADDITIONAL FIBER IN EACH TYPE 5 PULL BOX. THERE IS 100' ADDITIONAL FIBER IN S31 AND S27. THERE IS 10' ADDITIOANAL FIBER IN EACH TYPE 2 PULL BOX.

LEGEND

- CCTV CAMERA
- BASE MOUNTED SCOUT CABINET
- (ITS) SCOUT FIBER SPLICE VAULT WITH SPLICING
- (ITS) PULL BOX, MODIFIED TYPE 5
- CENTURY LINK BOX
- PULL BOX, CLASS 1
- POWER SUPPLY ASSEMBLY
- RADAR
- RWIS ENVIRONMENTAL SENSOR UNIT
- CONDUIT, PUSHED
- CONDUIT, TRENCHED

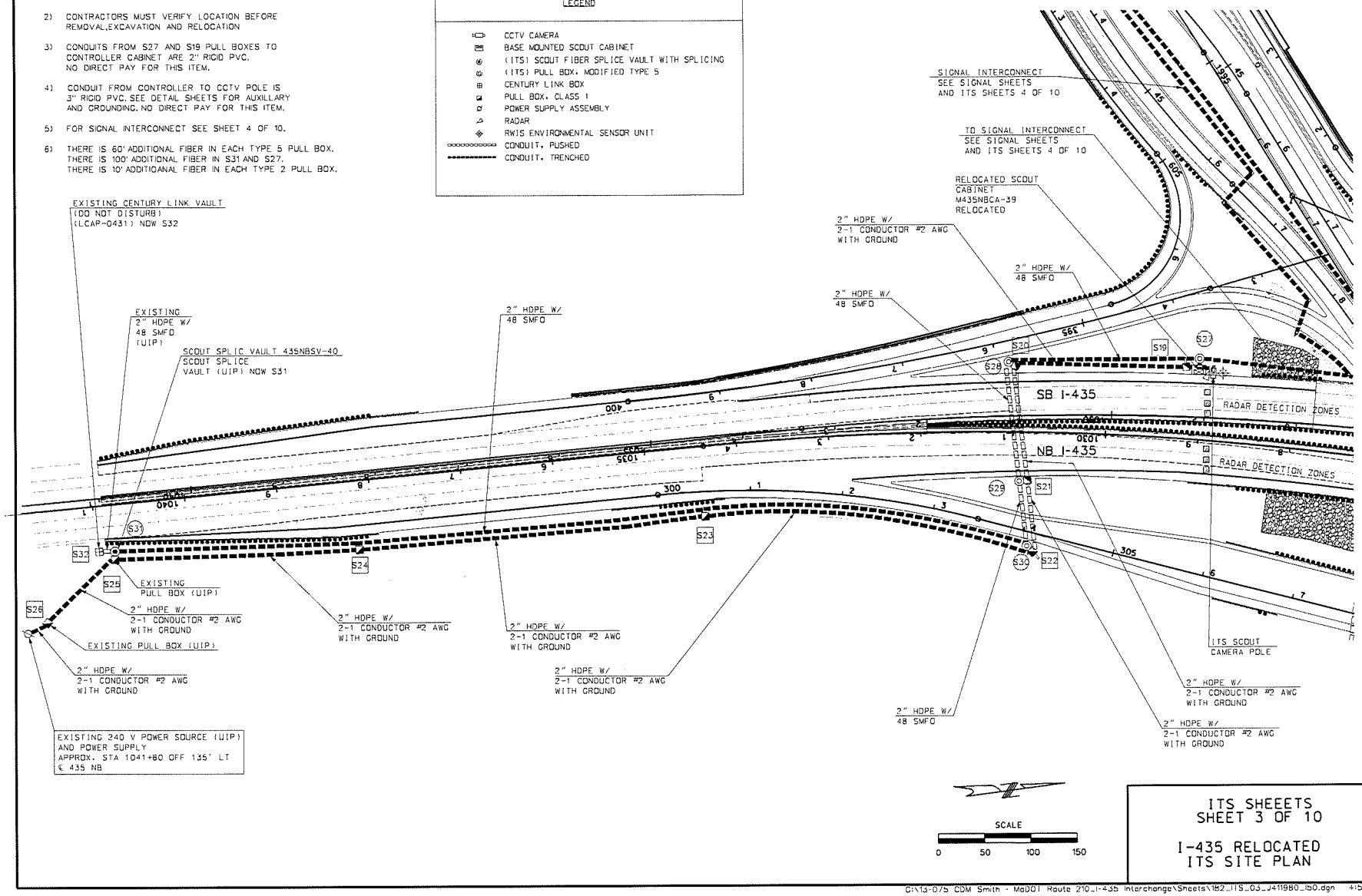

ITS SHEEETS
SHEET 3 OF 10

I-435 RELOCATED
ITS SITE PLAN

STATE OF MISSOURI
THOMAS P. EVANS
NUMBER E-29253
REGISTERED PROFESSIONAL ENGINEER

DATE PREPARED	01-12-2015
ROUTE	I-435
STATE	MO
DISTRICT	KC
SHEET NO.	182
COUNTY	CLAY
JOB NO.	J4I1980
CONTRACT ID.	
PROJECT NO.	
BRIDGE NO.	

DATE	DESCRIPTION

IF A SEAL IS PRESENT ON THIS SHEET IT HAS BEEN ELECTRONICALLY SEALED AND DATED.

MISSOURI HIGHWAYS AND TRANSPORTATION COMMISSION

MoDOT
105 WEST CAPITOL
JEFFERSON CITY, MO 65102
1-888-ASK-MODOT (1-888-275-6636)

TREKK DESIGN GROUP, LLC
1441 East 104th St., Suite 105
Kansas City, MO 64131
Tel (816) 874-4655
Fax (816) 874-4675
www.trekkdesigngroup.com
Missouri Cert. of Authority 2002310300

C:\13-075 CDM Smith - MoDOT Route 210_I-435 Interchange\Sheets\182_ITS_03_J4I1980_150.dgn 4:52:09 PM 01-12-2015

EFFECTIVE 04-01-99

FIBER DIAGRAM

LEGEND

- SIGNAL CONTROLLER CABINET
- CCTV CAMERA
- BASE MOUNTED SCOUT CABINET
- (ITS) SCOUT FIBER SPLICE VAULT WITH SPLICING
- (ITS) PULL BOX, MODIFIED TYPE 5
- CENTURY LINK BOX
- PULL BOX, CLASS 1
- POWER SUPPLY ASSEMBLY
- RADAR
- RWIS ENVIRONMENTAL SENSOR UNIT
- CONDUIT, PUSHED
- CONDUIT, TRENCHED

PLAN NOTES:

1) ALL LOCATIONS ARE APPROXIMATE

2) CONTRACTORS MUST VERIFY LOCATION BEFORE REMOVAL, EXCAVATION AND RELOCATION

3) CONDUITS FROM S27 AND S19 PULL BOXES TO CONTROLLER CABINET ARE 2" RIGID PVC. NO DIRECT PAY FOR THIS ITEM.

4) CONDUIT FROM CONTROLLER TO CCTV POLE IS 3" RIGID PVC. SEE DETAIL SHEETS FOR AUXILLARY AND GROUNDING. NO DIRECT PAY FOR THIS ITEM.

5) FOR ITS SYSTEM SEE SHEET 3 OF 10.

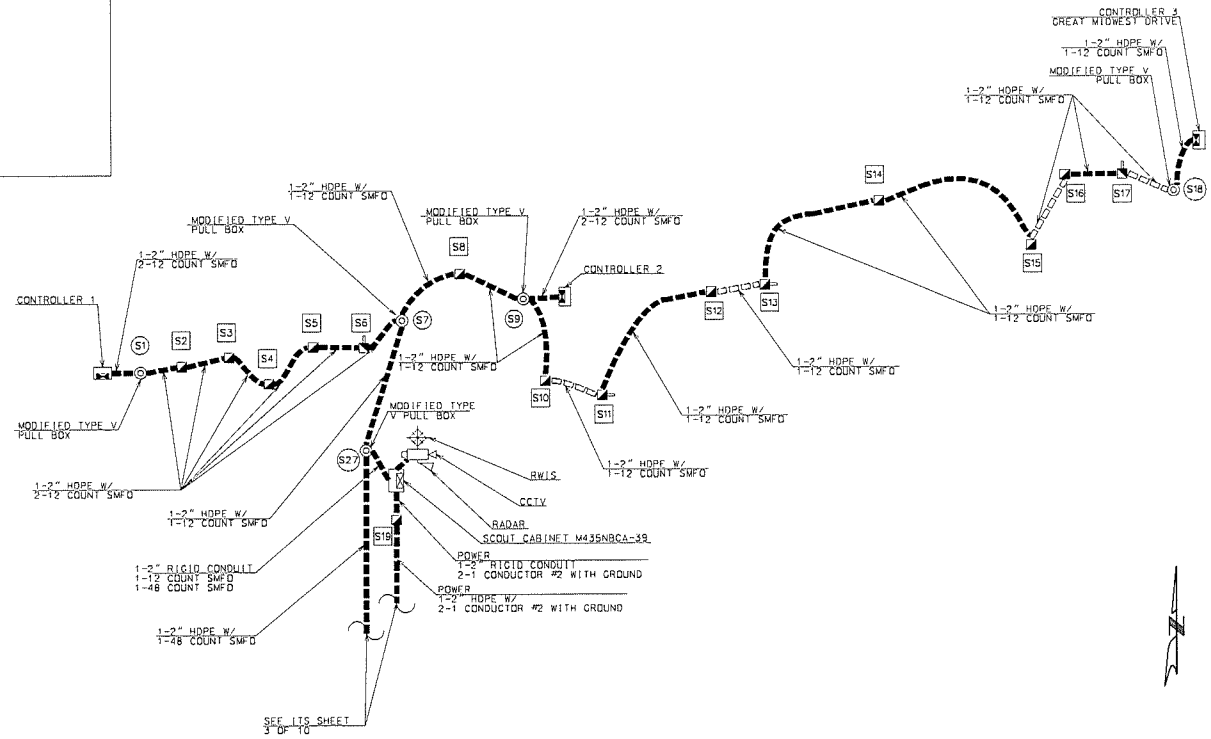

ITS SHEETS
SHEET 4 OF 10

SIGNAL INTERCONNECT

STATE OF MISSOURI REGISTERED PROFESSIONAL ENGINEER THOMAS P. FANG NUMBER E-25253

DATE PREPARED 01-12-2015

ROUTE	STATE
I-435	MO
DISTRICT KC	SHEET NO. 183

COUNTY CLAY

JOB NO. J411980

CONTRACT ID.

PROJECT NO.

BRIDGE NO.

DATE	DESCRIPTION

IF A SEAL IS PRESENT ON THIS SHEET IT HAS BEEN ELECTRONICALLY SEALED AND DATED.

MISSOURI HIGHWAYS AND TRANSPORTATION COMMISSION

MoDOT

105 WEST CAPITOL
JEFFERSON CITY, MO 65102
1-888-ASK-MODOT (1-888-275-6636)

TREKK DESIGN GROUP, LLC

1441 East 104th St., Suite 101
Kansas City, MO 64131
Tel (816) 874-4433
Fax (816) 874-4475
www.trekkdesigngroup.com

Mikaela Clark, LE
Mclark@trekkdesigngroup.com

G:\13-075 CDM Smith - MoDOT Route 210_I-435 Interchange\Sheets\183_ITS_04_J411980_15-0376.dgn 4:52:17 PM 01-12-2015

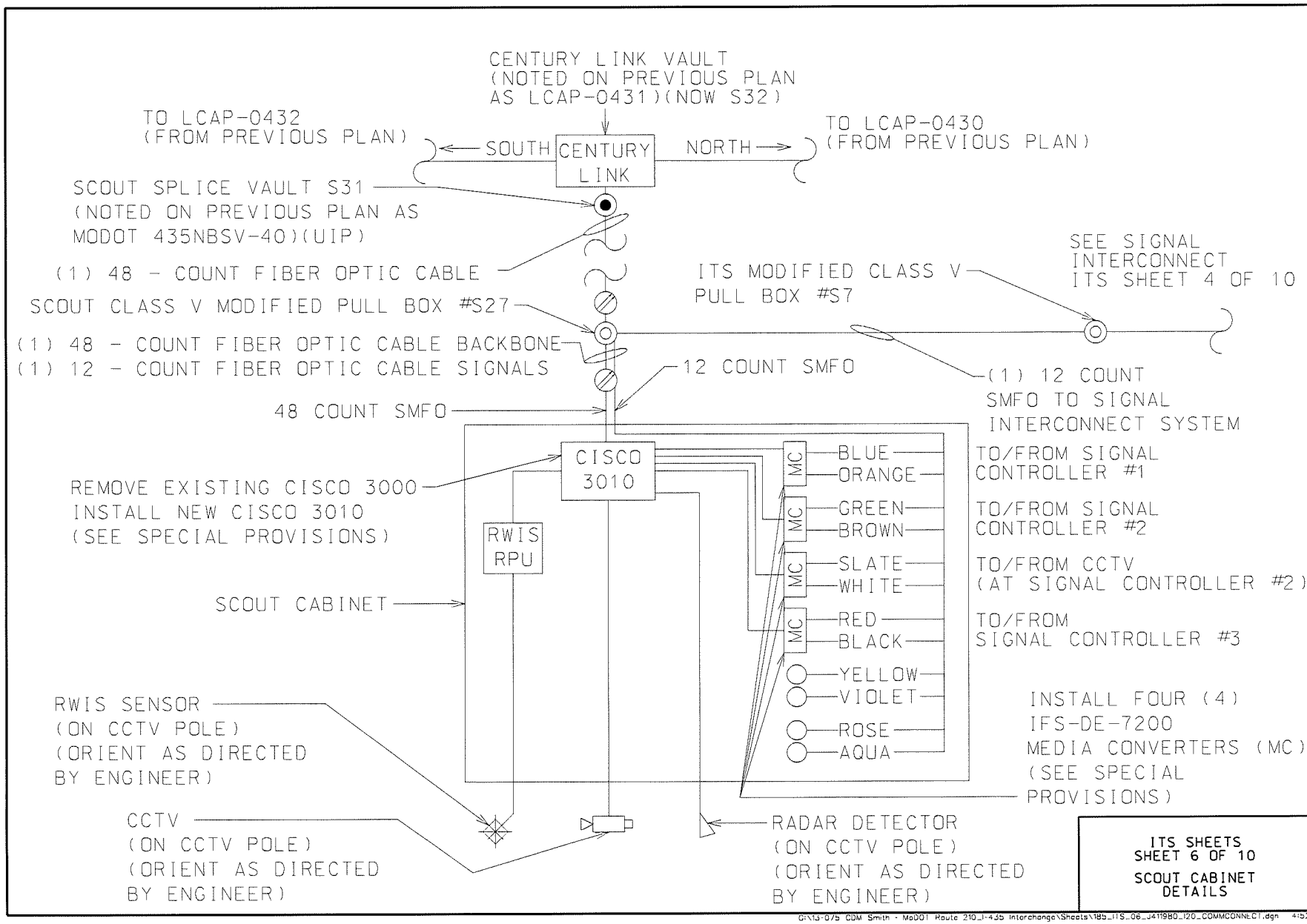

ITS SHEETS
SHEET 6 OF 10

SCOUT CABINET
DETAILS

STATE OF MISSOURI
THOMAS P. EVANS
NUMBER E-29253
REGISTERED PROFESSIONAL ENGINEER

DATE PREPARED	01-12-2015
ROUTE I-435	STATE MO
DISTRICT KC	SHEET NO. 185
COUNTY CLAY	
JOB NO. J411980	
CONTRACT ID.	
PROJECT NO.	
BRIDGE NO.	

DATE	DESCRIPTION

MISSOURI HIGHWAYS AND TRANSPORTATION COMMISSION

MoDOT
105 WEST CAPITOL
JEFFERSON CITY, MO 65102
1-888-ASK-MODOT (1-888-275-6636)

TREKK DESIGN GROUP, LLC
1441 East 104th St., Suite 100
Kansas City, MO 64131
Tel (816) 874-4455
Fax (816) 874-4676
www.trekkdesigngroup.com
Missouri Cert. of Authority 2002016300

IF A SEAL IS PRESENT ON THIS SHEET IT HAS BEEN ELECTRONICALLY SEALED AND DATED.

G:\13-075 CDM Smith - MoDOT Route 210_I-435 Interchange\Sheets\185_ITS_06_J411980_I20_COMMCONNECT.dgn 4:52:25 PM 01-12-2015

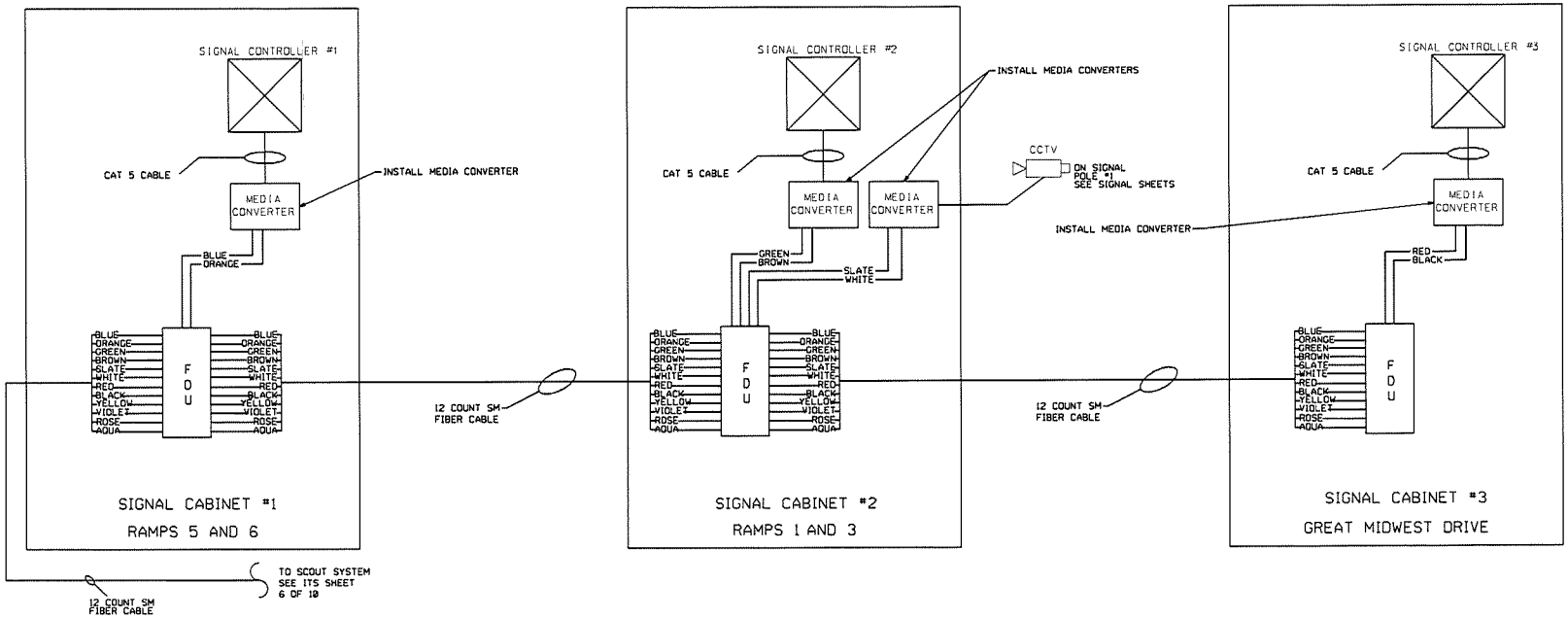

LEGEND

- INDIVIDUAL FIBER SPLICE
- FIBER SPLICE OF EACH FIBER IN BUFFER TUBE
- UNTERNIMATED FIBER/BUFFER TUBE/CABLE
- PROPOSED FIBER/BUFFER TUBE/CABLE
- SIGNAL CONTROLLER
- FIBER DISTRIBUTION UNIT
- MEDIA CONVERTER

NOTES:

1. UNUSED BUFFER TUBES SHALL PASS THROUGH SPLICE ENCLOSURE WITHOUT SPLICING. DO NOT BREAK OUT INDIVIDUAL FIBERS.
2. UNTERMINATED FIBERS/BUFFER TUBES SHALL BE STORED IN SPLICE TRAYS.
3. ALL PIGTAILS AND JUMPERS SHALL BE TERMINATED WITH SC STYLE CONNECTORS. PATCH PANELS (FIBER DISTRIBUTION UNITS) TO BE CONFIGURED WITH SC STYLE CONNECTORS.
4. FIBER DISTRIBUTION UNITS (FDU) SHALL BE INSTALLED IN CONTROLLER CABINETS 1, 2 AND 3. (SEE SPECIAL PROVISIONS).
5. INSTALL NEW IFS DE-7200 MEDIA CONVERTERS IN EACH SIGNAL CONTROLLER CABINET AS SHOWN. (SEE SPECIAL PROVISIONS).

ITS SHEET
SHEET 7 OF 10

ROUTE 210 AND 435
SIGNAL INTERCONNECT

STATE OF MISSOURI
THOMAS P. EVANS
NUMBER E-29253
REGISTERED PROFESSIONAL ENGINEER

DATE PREPARED	01-12-2015
ROUTE	I-435
STATE	MO
DISTRICT	KC
SHEET NO.	186
COUNTY	CLAY
JOB NO.	J4I1980
CONTRACT ID.	
PROJECT NO.	
BRIDGE NO.	

DATE	DESCRIPTION

IF A SEAL IS PRESENT ON THIS SHEET IT HAS BEEN ELECTRONICALLY SEALED AND DATED.

MISSOURI HIGHWAYS AND TRANSPORTATION COMMISSION
MoDOT
105 WEST CAPITOL
JEFFERSON CITY, MO 65102
1-888-ASK-MODOT (1-888-275-6636)

TREKK DESIGN GROUP, LLC
1441 East 104th St., Suite 100
Kansas City, MO 64131
Tel (816) 874-4455
Fax (816) 874-4473
www.trekkdesigngroup.com
Missouri Cert. of Authority 2002010300

C:\13-075 CDM Smith - MoDOT Route 210_I-435 Interchange\Sheets\186_ITS_07_J4I1980_I20_FIBERSPLICE2.dgn 4:52:25 PM 01-12-2015

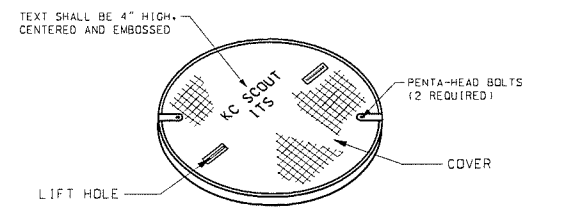

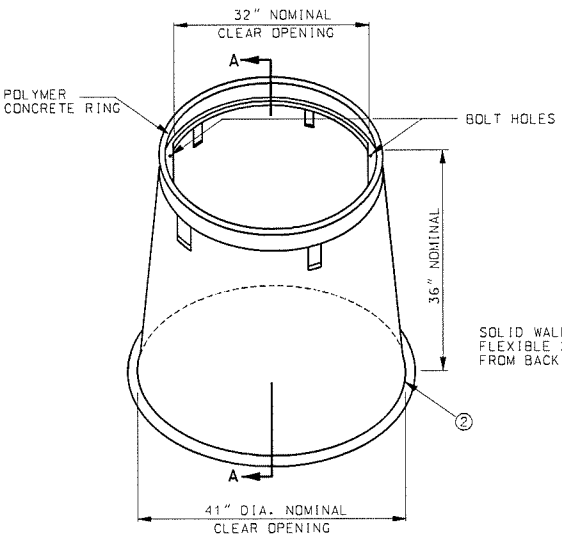

CIRCULAR PULL BOX
CLASS 5 MODIFIED

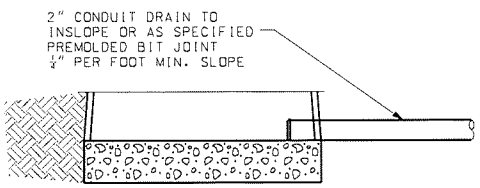

TYPE II DRAIN TYPE
(SEE DRAIN OUTLET DETAILS)
(SECTION ABOVE BREAK APPLICABLE TO TYPE I DRAIN.)

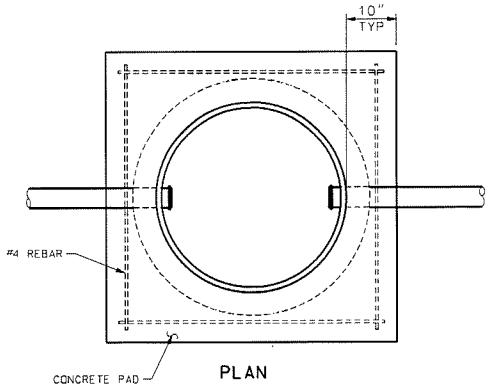

PLAN

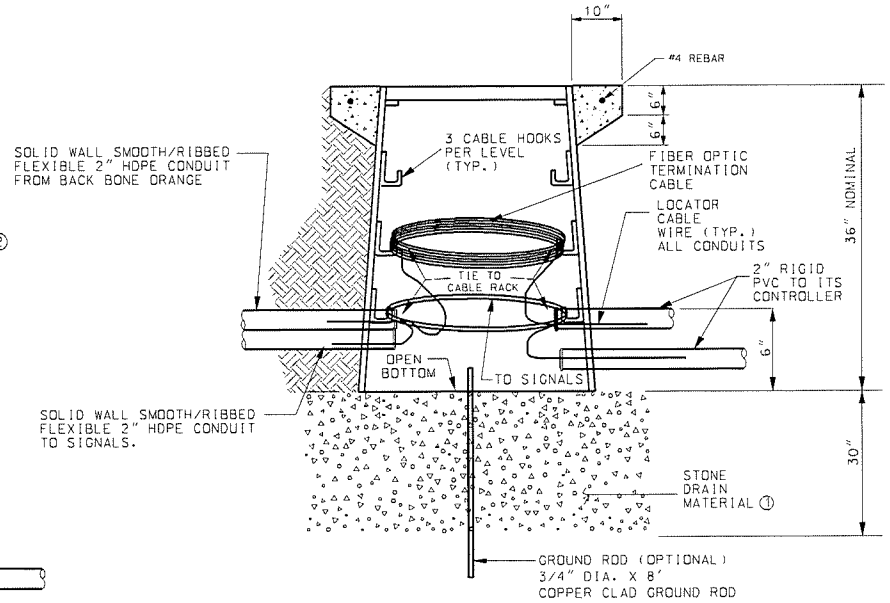

SECTION A-A
TYPE I DRAIN TYPE

1. AGGREGATE SHALL BE TYPE 1 CONFORMING TO SEC 1007.
2. BOX SHALL BE OF A FLARE DESIGN AND HAVE A LIP FOR STABILIZATION.

GENERAL NOTES:

A MINIMUM OF NINE HOOKS, INSTALLED IN THREE LEVELS, SHALL BE INCLUDED WITH EACH PULL BOX.

IF SUBSURFACE CONDITIONS EXIST WHICH PROHIBIT THE PLACEMENT OF THE GROUND ROD IN A VERTICAL POSITION, THE ROD MAY BE DRIVEN AT AN OBLIQUE ANGLE NOT TO EXCEED 45 DEGREES FROM VERTICAL OR BURIED IN A TRENCH AT LEAST 30 IN. DEEP. CONNECTION TO GROUND ROD SHALL BE CADWELDED.

THE CIRCULAR PULL BOX COVER SHOULD BE SIZED TO FIT A BOX WITH AN OPENING OF 32".

ALL CONCRETE SHALL BE 3,000 PSI MINIMUM.

LIFT HOLE REQUIRED ON ALL COVERS.

ITS SHEETS
SHEET 8 OF 10

TYPE V
PULL BOX (MODIFIED)
DETAILS

STATE OF MISSOURI
ROBERT A. CUMMINGS
NO. E-25253
REGISTERED PROFESSIONAL ENGINEER

DATE PREPARED	
01-12-2015	
ROUTE I-435	STATE MO
DISTRICT KC	SHEET NO. 187
COUNTY CLAY	
JOB NO. J4I1980	
CONTRACT ID.	
PROJECT NO.	
BRIDGE NO.	

DATE	DESCRIPTION

MISSOURI HIGHWAYS AND TRANSPORTATION COMMISSION
MoDOT
105 WEST CAPITOL
JEFFERSON CITY, MO 65102
1-888-ASK-MODOT (1-888-275-6636)

TREKK DESIGN GROUP, LLC
1441 East 104th St., Suite 105
Kansas City, MO 64131
Tel (816) 874-4455
Fax (816) 874-4475
www.trekkdesigngroup.com
Missouri Cert. of Authority 2002015000

IF A SEAL IS PRESENT ON THIS SHEET IT HAS BEEN ELECTRONICALLY SEALED AND DATED.

G:\13-075 CDM Smith - MoDOT Route 210_I-435 Interchange\Sheets\187_ITS_08_J4I1980_I1_Pull_Box-Modified_Type5.dgn 4:52:33 PM 01-12-2015

POLE BASE PLATE ASSEMBLY AND ANCHOR BOLTS											
POLE HEIGHT L (FT)	BASE PLATE								ANCHOR BOLTS		
	C	D	F	H	J	S	R	T	P	SIZE DIA. × LENGTH	E
45	19 1/2"	25 1/2"	13 3/4"	1 13/16"	11"	19 3/4"	3"	2 3/4"	7"	1 1/2" X 6'-7"	10"

POLE TABLE INFORMATION ONLY								
POLE HEIGHT L (FT)	A				B			
	DIA. @ TOP	DIA. @ BOTT.	THICKNESS	LENGTH (FT)	DIA. @ TOP	DIA. @ BOTT.	THICKNESS	LENGTH (FT)
45	6"	9 1/8"	3/16"	20	9 1/8"	13"	3/16"	25

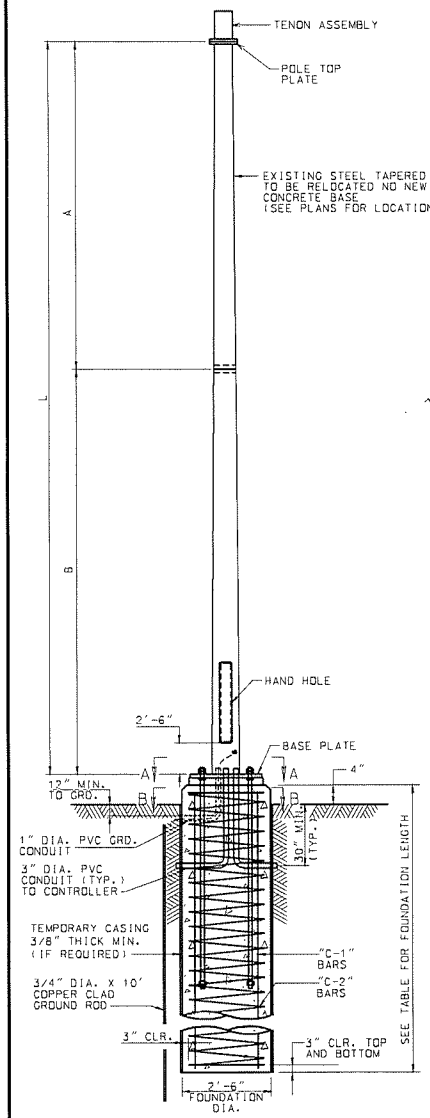

EXISTING CAMERA POLE ON NEW BASE

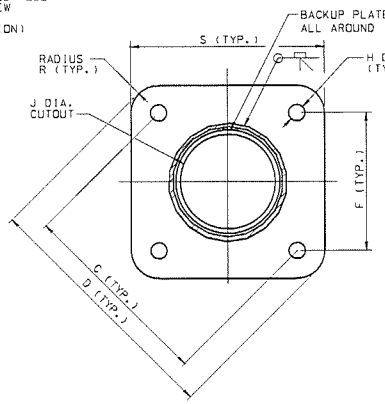

SECTION A-A

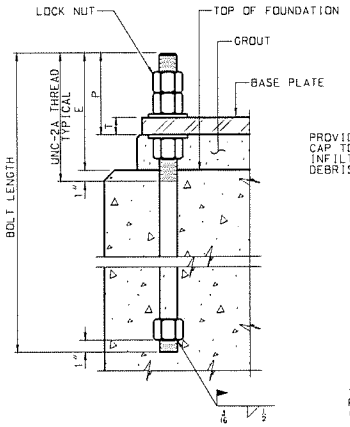

ANCHOR BOLT DETAIL

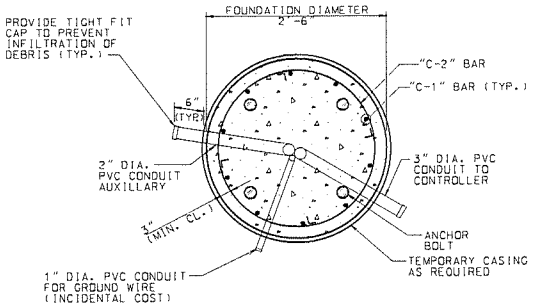

SECTION B-B

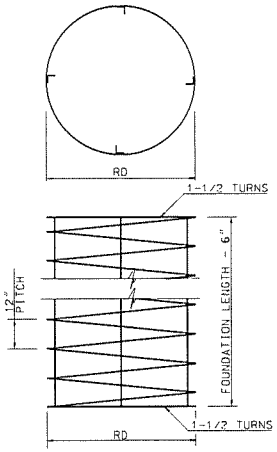

TYPE "C-2" BAR DETAIL

CCTV POLE FOUNDATION FOR RELOCATED POLE						
POLE HEIGHT (FT)	FOUNDATION LENGTH	FOUNDATION DIAMETER	*TYPE "C-2"			REMARKS
			NO. & SIZE	RD	LENGTH	
45	10'-0"	2'-6"	1-#4	2'-0"	98'-9"	IF ROCK IS ENCOUNTERED SHALLOWER THAN FOUNDATION LENGTH, DRILL ROCK SOCKET TO DESIGN DEPTH OR 3'-9" INTO SOUND ROCK (4'-6" FOR 3'-0" DIA. SHAFT), WHICHEVER IS SHALLOWER. NO ADDITIONAL PAYMENT WILL BE MADE FOR ROCK SOCKETS, IF NECESSARY

*FOUR ANGLE OR CHANNEL SPACERS ARE REQUIRED FOR EACH SPIRAL. SPACERS ARE TO BE PLACED ON INSIDE OF SPIRALS.

NOTES:

THE FOUNDATION SHALL BE GROUNDED.

IF THE GROUND ROD CANNOT BE INSTALLED VERTICALLY WITHOUT DAMAGE, THE GROUND ROD MAY BE INSTALLED AT 45 DEG (MAX.) FROM VERTICAL.

ALL CONDUITS AND ANCHOR BOLTS SHALL BE RIGIDLY INSTALLED BEFORE THE CONCRETE IS PLACED. ANCHOR BOLTS SHALL BE SPACED BY MEANS OF A TEMPLATE. THE CENTER OF WHICH SHALL COINCIDE WITH THE CENTER OF THE FOUNDATION.

ALL ANCHOR BOLTS SHALL BE FULLY GALVANIZED.

INTEGRITY TESTING ON COMPLETED DRILLED SHAFTS FOR CCTV POLE FOUNDATIONS WILL NOT BE REQUIRED.

PLACE 2" DIAMETER PVC CONDUIT 180 DEGREES TO 3" CONDUIT EXTEND MINIMUM 6" FROM BASE PROVIDE TIGHT FIT CAP.

TEMPORARY STEEL CASING MAY BE REQUIRED IN EACH SHAFT TO PREVENT SOIL COLLAPSE.

ITS SHEETS
SHEET 9 OF 10

CCTV POLE AND FOUNDATION DETAILS

STATE OF MISSOURI
THOMAS P. EVANS
NUMBER E-28253
REGISTERED PROFESSIONAL ENGINEER

DATE PREPARED 01-12-2015
ROUTE I-435 | STATE MO
DISTRICT KC | SHEET NO. 188
COUNTY CLAY
JOB NO. J4I1980
CONTRACT NO.
PROJECT NO.
BRIDGE NO.

DATE	DESCRIPTION

IF A SEAL IS PRESENT ON THIS SHEET IT HAS BEEN ELECTRONICALLY SEALED AND DATED.

MISSOURI HIGHWAYS AND TRANSPORTATION COMMISSION
105 WEST CAPITOL
JEFFERSON CITY, MO 65102
1-888-ASK-MODOT (1-888-275-6636)

TREK DESIGN GROUP, LLC
1441 East Dale St. Suite 1
Springfield, MO 65807
Tel (417) 874-4483
Fax (417) 874-4473
www.trekdesigngroup.com
Missouri Corp. Of Authority 2003-0300

G:\13-075 CDM Smith - MoDOT Route 210_I-435 Interchange\Sheets\188_ITS_09_J4I1980_I20_SCOUTSHORTPOLE.dgn 4:52:40 PM 01-12-2015

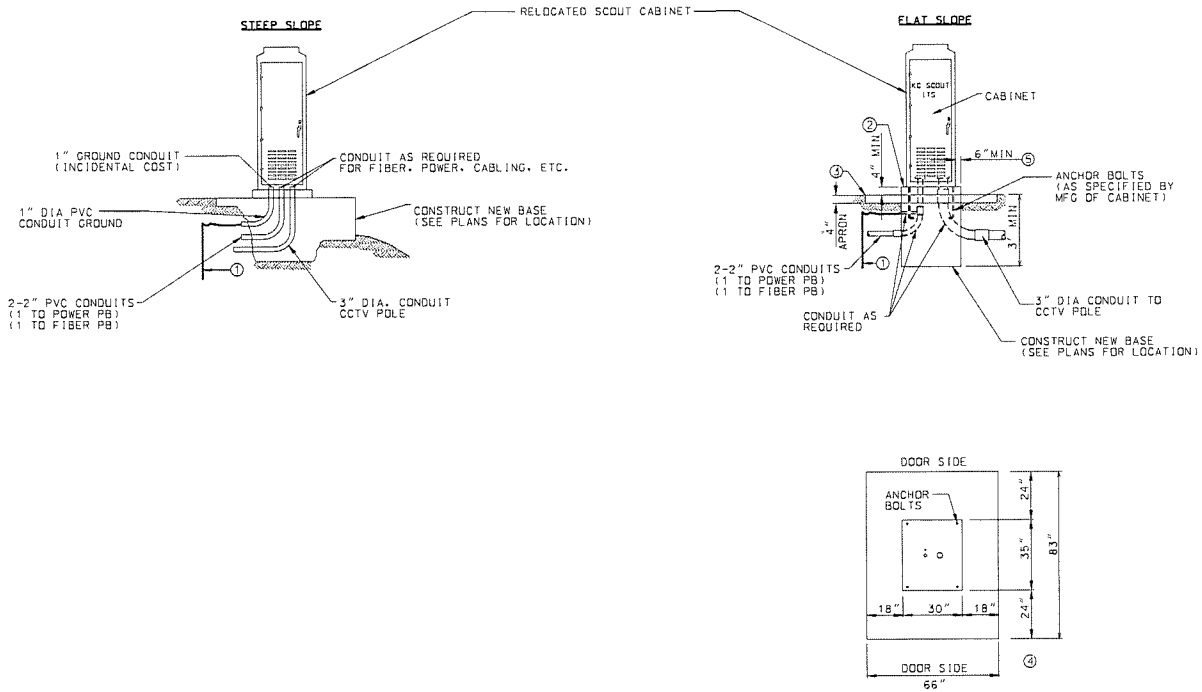

CABINET (TYPE 334) FOUNDATION DETAILS

NOTES:

1. GROUND ROD, 3/4" DIA. x 8' MIN. IF SUBSURFACE CONDITIONS EXIST WHICH PROHIBIT THE PLACEMENT OF THE GROUND ROD IN A VERTICAL POSITION, THE ROD MAY BE DRIVEN AT AN OBLIQUE ANGLE NOT TO EXCEED 45 DEGREES FROM VERTICAL OR BURIED IN A TRENCH AT LEAST 30 IN. DEEP. CONNECTION TO GROUND ROD SHALL BE CALDWELDED.
THE GROUND ROD SHALL BE COMPLETELY IN THE GROUND, NO PART OF THE GROUND SHALL BE EMBEDDED IN CONCRETE.
2. LIFETIME SILICONE CAULK BETWEEN CABINET AND BASE.
3. APRON SHALL BE FLUSH WITH THE GROUND IF LOCATED IN A FLAT AREA. THREE SIDES OF THE CABINET FOUNDATION MUST BE FORMED IF LOCATED ON A SLOPE.
4. DIMENSION VARIES ACCORDING TO CABINET HEIGHT.
5. BASES SHALL PROVIDE A 6" MIN. LIP AROUND ALL SIDES OF CABINET. FOR LARGER CABINETS, BASE SIZE SHALL BE INCREASED AS REQUIRED TO PROVIDE THIS LIP.
6. NO DIRECT PAY FOR 2" RIGID CONDUIT FROM CONTROLLER TO PB S27 AND S19. NO DIRECT PAY FOR 3" RIGID FROM CONTROLLER TO ITS POLE. NO DIRECT PAY FOR 1" RIGID CONDUIT FOR GROUND SYSTEM.

IT SHEETS
SHEET 10 OF 10

CABINET FOUNDATION DETAILS

STATE OF MISSOURI
THOMAS P. EVANS
NUMBER E-29253
REGISTERED PROFESSIONAL ENGINEER

DATE PREPARED	01-12-2015
ROUTE	I-435
STATE	MO
DISTRICT	KC
SHEET NO.	189
COUNTY	CLAY
JOB NO.	J4I1980
CONTRACT ID.	
PROJECT NO.	
BRIDGE NO.	

DATE	DESCRIPTION

MISSOURI HIGHWAYS AND TRANSPORTATION COMMISSION
MoDOT
105 WEST CAPITOL
JEFFERSON CITY, MO 65102
1-888-ASK-MODOT (1-888-275-6636)

TREKK DESIGN GROUP, LLC
1441 East 104th St., Suite 103
Kansas City, MO 64131
Tel (816) 974-6655
Fax (816) 974-6675
www.trekkdesigngroup.com
Missouri Cert. of Authority 2002010300

THOMAS P. EVANS
PROFESSIONAL ENGINEER
E-29253

IF A SEAL IS PRESENT ON THIS SHEET IT HAS BEEN ELECTRONICALLY SEALED AND DATED.

G:\13-075 CDM Smith - MoDOT Route 210_I-435 Interchange\Sheets\189_ITS_10_J4I1980_I20_CABINET_FOUNDATION.dgn 4:52:41 PM 01-12-2015